THERMAFLO ENGINEERING COMPANY
Since 1986
Manufacturers Of Steam Fired Specialty Equipment

• JET SPRAY JS SERIES
• JET TRAY SERIES
• T SERIES

DEAERATORS
PD-24 through PD-120

INSTALLATION
OPERATION
&
MAINTENANCE

THERMAFLO ENGINEERING COMPANY
2880 Fair Avenue
Newberry, South Carolina 29108
Telephone: 704-940-1228 / Fax: 704-940-1227
Internet: www.thermafloengineering.com

PREFACE

These instructions describe the principles of deaeration of water and the physical equipment utilized to accomplish deaeration. An understanding of these principles will assist in achieving satisfactory and effective operation of the deaerating equipment. The equipment is flexible and will accomplish the required deaeration when operated properly. The instructions are intentionally made general to cover possible variations of operating conditions or applications of equipment. The user of this equipment should contact Thermaflo Engineering when questions arise regarding aspects of operation not addressed in this manual.

TABLE OF CONTENTS

TABLE OF CONTENTS

SAFETY PRECAUTIONS

ALL SAFETY BEGINS AND ENDS WITH A PRUDENT, RESPONSIBLE PERSON WHOSE WELFARE IS THE PRIMARY CONCERN. THERE IS NO GREATER SAFETY PRACTICE THAN THE CARE AND COMMON SENSE EXERCISED BY YOU.

BOILER PLANT SYSTEM

The deaerator is only part of a large boiler feed water system. Persons who come in contact with the system must know all safety rules of the deaerator and connecting and related equipment.

DEAERATOR

The following are potential dangers associated with a deaerator. DO NOT attempt to disassemble, repair, perform maintenance, or otherwise work on a deaerator until all of the potential dangers have been considered and their respective safety precautions followed.

HIGH PRESSURE

The deaerator is pressurized during operation and the pressure may remain high after the equipment is shut off. Removal of manway covers, inspection ports, or any bolted connections while pressure exists in the vessel can cause the covers, etc. to break loose or discharge hot, high pressure fluids which could cause injury. Therefore, disassembly or work on the deaerator should not begin until the following precautions have been taken:

1. Isolate the vessel from the boiler system to insure that there can be no operation, residual, or otherwise of the deaerator. Plant system safety procedures must be consulted to insure proper isolation.

2. Check to see that pressure gauges are properly functioning and that the pressure gauges or other pressure indicators show zero pressure.

3. Carefully open vent valves provided on vessel. Open valves very slowly. Listen for hissing sounds and observe any escaping steam or fluids. If hissing or escaping fluids are present, do not continue to open until all sounds or fluid discharge stops.

HIGH TEMPERATURE

The deaerator operates at high temperatures that could cause severe burns. When the vessel is shut off, it can take hours or days to cool to safe temperatures. Any temperature in excess of 212º F could also indicate the presence of internal pressure. Therefore, disassembly or contact with metal parts should not begin until the following precautions have been taken:

1. Isolate the vessel from the boiler system to insure that there can be no operation, residual, or otherwise of the deaerator. Plant system safety procedures must be consulted to insure proper isolation.
2. Check thermometers or other temperature indicators for proper functioning and make certain that temperature is less than 100° F.

3. Use a temperature sensor or comparable devise to determine whether the deaerator has sufficiently cooled.

INTERNAL DANGER

Extreme caution should be exercised before entering the deaerator.

First, deaerators may contain oxygenless gases (e.g. nitrogen) that can cause severe illness or death if inhaled. Deaerators are frequently shipped with nitrogen. Many owners and users of deaerators also pressurize the deaerator with nitrogen during short or long inactivity. Nitrogen is colorless and odorless and cannot be easily detected. Because of the absence of oxygen in gases such as nitrogen, inhalation of sufficient amounts can cause severe illness or death. Therefore, do not enter the deaerator until the precautions listed below have been taken.

Second, the inside of the deaerator may be very tight and confining. It may also contain sharp corners and protrusions which could cause injury. Any person entering a deaerator should be knowledgeable of the proposed Occupational Safety and Health Act requirements on confined space entry and should follow the precautions listed below:

1. Isolate the vessel from the boiler system to insure that there can be no operation, residual, or otherwise of the deaerator. Plant system safety procedures must be consulted to insure proper isolation.

2. The work crew should consist of two or more people at all times.

3. Determine that the deaerator contains sufficient oxygen and does not contain any other dangerous gas.

4. Open all vents, manways, or access openings to permit all oxygenless gas to escape and properly ventilate the deaerator. It may be necessary to utilize exhaust fans, ventilators, and blowers to speed the ventilation process. Maintain adequate circulation of oxygen throughout work on the deaerator.

5. Provide adequate scaffolding, platforms, or ladders.

6. Provide adequate lighting.

7. Understand the construction of the equipment and all relevant safety requirements.

8. Use appropriate safety equipment including, but not limited to, hard hats, safety glasses or goggles, gloves, and heavy duty work clothing.

GENERAL MAINTENANCE

The maintenance section of this manual and the instructions in the accessory section provide normal maintenance procedures for the deaerator. Additionally, the following maintenance inspections should be performed to assure continued safe operation.

1. Inspect for cracks, breakage of internal parts, and internal erosion or corrosion in or near welds or pressure parts (e.g. shells and heads).

2. Inspect pumps for loose bolts or coupling parts. If the pumps are disassembled, examine all bearings, shafts, impellers, and seals for wear and damage.

3. Safety and relief valves should be activated periodically to assure proper performance. These valves should also be inspected to assure that no external devices such as "gags" or extraneous parts can impede proper operation.

4. Make certain that all safety tags are replaced when maintenance and inspections are complete.

Safety Valves, Relief Valves, and other Blow-Off Type Equipment (also Vacuum Breaking Equip.)

All deaerators are protected against damage by one or more safety devices. These devices are designed to discharge in the event that some operating condition causes the deaerator to exceed the standard operating level. This equipment partially relieves the pressure in the vessel and prevents damage.

The discharge from this equipment is extremely hot and can cause severe injury. Therefore, the following safety precautions should be observed in order to prevent personal injury:

1. If customer is installing these devices, locate them in areas where personnel cannot come in contact during operation.

2. Each device should have a suitable exhaust duct, pipe, or deflector to insure the discharge cannot cause personal injury.

3. Since these safety devices are not necessarily provided by Thermaflo Engineering, it is necessary to consult the maintenance, operation instructions, and safety manual of the specific supplier.

Pumps

Various pumps are used with every boiler feed water system. Injury can occur if proper operation and maintenance procedures are not followed. Therefore, persons performing maintenance on pumps should obtain all instructions, procedures and safety requirements. Additionally, the following general safety practices should be followed:

1. Avoid working on the pump while it is operating.

2. If running adjustments are necessary, avoid wearing loose clothing that could become tangled with rotating parts.

3. Always make certain that proper electrical disconnections and positive valve lock-outs are used.

4. If the pump must be dismantled, beware of hot fluids and high pressure.

5. Pump Manufacturer IOM to Prevail for Install and Startup.

SAFETY PRECAUTIONS CHECK LIST

1. Do not touch hot surfaces.

2. Do not open valves to atmosphere (except air vent outlet valves) while vessel is under pressure. Release internal pressure and allow stored water to cool to ambient temperature before entering the deaerator. Before entering the storage vessel, drain tank completely.

3. Do not remove instruments or instrument wells when vessel is under pressure.

4. Avoid hot vent vapors (vent valve, overflow valve, relief valve areas).

5. Always follow OSHA rules and use OSHA-approved equipment.

6. Power must be disconnected to all accessory electrical equipment and instruments, prior to working on the unit.

7. During shutdown, the following safety precautions shall be followed before manned entry into the vessel:

    a. All inlet lines connecting to the vessel shall be closed and safety-tagged.

    b. Release all internal pressure and allow the unit sufficient time to cool.

    c. Carefully open the manway covers and establish air circulation before entering the vessel. (Note: all water must be drained from the storage vessel before removing the manhole cover.)

    d. Verify with suitable monitoring equipment that the oxygen level in the vessel is adequate to support life.

    e. Always have a safety observer stationed immediately outside the vessel when the vessel is being inspected internally.

    f. Use low voltage (safety) lights inside the vessel.

8. Personnel handling the stainless steel trays should wear gloves to protect their hands from sharp edges of the trays.

9. Safety relief valves, overflow valves, vent valves, vacuum breakers, sample valves, drain valves, etc. emit high temperature and high pressure fluid discharges that will result in serious injury.

10. All devices which discharge to atmosphere such as those listed in Item No. 9 should be piped to a location that prevents injury to personnel.

INSTALLATION

RECEIVING SHIPMENT

The deaerator top and storage tank have been hydrostatically tested before shipment. Unload the deaerator carefully, ensuring that it is level in both planes. See paragraph on leveling. Slings, blocks, and handling rigging must be placed carefully. The valves and accessory parts are shipped separately, boxed or crated as necessary. Check packing slip and verify receipt of all items listed. Notify Thermaflo Engineering immediately of any discrepancies.

Note: When installing the deaerator top to the storage vessel with a flanged downcomer, it may be necessary to install the studs for this connection before lowering the deaerator top.

LOCATION

The deaerator should be supported at an elevation above the boiler feed pump to provide the necessary suction head on the pump as specified by the pump manufacturer. When determining the elevation of the deaerator with respect to the pump, it is necessary to include a safe allowance for pipe friction as well as the hydrostatic suction head required for the pump. The static head to be provided must be computed accounting for the elevated temperature (reduced specific gravity and density) of the water in the storage section.

In locating the deaerator and storage tank, consideration should be given to providing sufficient space around the unit to permit tray removal and to providing suitable access to the accessory equipment for maintenance or inspection work.

LEVELING

The shell of the deaerator must be leveled accurately in two directions to insure uniform water distribution. Because the steam inlet flange of the deaerator was used as a shop reference for leveling, the deaerator should be level when it is bolted to the foundation. It is important that this procedure be followed.

PIPING

All piping is to be supplied by others.

The deaerator must be piped to connections as shown on the assembly drawing. Check valves must be installed in the steam line when the deaerator is fed by exhaust headers. Care must be exercised so that no stresses are imposed on the deaerator shell. The deaerator and storage tank nozzles are not designed to take excessive external piping loadings. The customer shall design connecting piping such that the piping is supported independently of these vessels.

Thermaflo Engineering offers the following recommendations for mixing hot condensate with cold makeup water:

1. Provide check valves in lines prior to blending point.
2. Hot condensate must be non-flashing under all operating conditions.
3. Piping downstream of the hot condensate and cold makeup combination should be stainless steel.
4. Allow 10 pipe diameters upstream of the deaerator inlet to insure a proper blend.
5. Avoid water hammer and flashing in the makeup as this will damage the inlet spray valve.

VENT PIPING

Vent piping should be installed with care to avoid any traps, pockets or horizontal runs. A vertical line, as short as possible, is best. A gate valve should be installed as close as possible to the end of the vent pipe.

An alternate to this would be a gate valve (for isolation) with an orifice device mounted at the end of the vent pipe. The vent orifice can be an orifice plate within an orifice union, an orifice plate between two flanges, or as simple as a pipe cap with a drilled hole sized for the vent flow rate. Vent orifices are the most feasible for a system that would have a fairly uniform or constant flow of non-condensible gases venting from it. Care must be taken to avoid closing the gate valve at any time except for maintenance or change of the orifice.

Note: Horizontal vent pipe lines will accumulate condensed steam which will result in water exiting the vent. Also, non-condensible gases are highly corrosive; therefore all piping should be either stainless steel or brass/bronze.

TRAYS (PD SERIES ONLY)

If trays are not installed by the fabricator, refer to the tray installation instructions below .

Tray Installation Instructions

Review all safety precautions before entering the vessel. It is imperative that all pertinent safety precautions be followed when entering and working in the vessel. In particular, Thermaflo Engineering recommends that personnel handling the stainless steel trays wear gloves to protect their hands from sharp edges on the trays.

Refer to the illustration on page 28 of this manual and the following instructions for proper installation of the trays:

1. After ensuring that required safety precautions have been taken, remove the vessel manway cover and enter the vessel.

2. After entering the vessel, slide up the closure plate.

3. Install the trays in side by side stacks with their long dimension perpendicular to the tray support beams.

4. Install the lowest tray of each stack such that the tray support legs clear the outside of the support beams. This ensures that the bottom face of the tray rests squarely on the support beam.

   NOTE: If these trays replace existing trays of another style or are installed on top of grating, it may be necessary to cut off or flatten the support legs of the bottom tray of each stack in order for the trays to rest properly. Also, on existing deaerators where less than a full complement of replacement trays is being furnished, these trays must be installed in full height vertical stacks independent of any older style trays. Do not attempt to intermix the new trays with another style tray in the same vertical stack.

5. With the bottom tray in place, as described above, install the next tray by aligning the upper tray's support legs with the two slots located at either end of the lower tray. If the support legs and slots do not line up properly, rotate the upper tray 180 degrees.

   NOTE: Proper installation requires that the tray support legs point down and are inserted into the slots of the next lower tray. The trays are constructed such that when the end slots and support legs are aligned properly, the slotted spilling edges are staggered. This staggering of the slots is essential for proper operation of the deaerator. Any other alignment of the trays is unacceptable.

6. Continue stacking the trays as described above until all trays have been installed. Refer to the table on page 27 for the correct stack height and quantity of trays for your size deaerator.

7. After all trays have been installed, firmly secure the closure plate on the inner compartment so that water and steam leakage are minimized.

8. If your deaerator is equipped with a tray hold down device, please refer to pages 29-30.

GENERAL

NOMENCLATURE

The letter "T" stands for a Thermaflo Engineering Jet Tray Deaerator type, while the number represents the deaerator tank diameter. When the suffix "S" appears, this represents special options that may have been purchased, such as heavy gauge trays and/or a tray hold down system for severe services. For the actual options purchased, refer to your contract with Thermaflo Engineering.

Example:	T-84	=	Jet Tray Deaerator 7' 0" outside diameter
	T-84S	=	Jet Tray Deaerator 7' 0" outside diameter with special options.

FUNCTION

The Thermaflo Engineering Uni-Pac Deaerator's primary function is deaeration of the feedwater. However, the unit also performs the following additional functions:

1. Feedwater Heating
2. Feedwater Storage
3. Feedwater Surge

In water, the presence of dissolved gases, particularly oxygen and carbon dioxide, causes accelerated corrosion. The corrosion process is especially rapid at elevated temperatures such as are encountered in boilers and heat exchange equipment. The primary function of the deaerator is to prevent this corrosion by removing the dissolved gases from all sources of water entering the boiler.

PRINCIPLES OF HEATING AND DEAERATION

Complete heating of boiler feed water is accomplished by direct contact of the water and the steam. As in all heat transfer phenomena, contact surface and duration of contact are critical for proper operation. In these units, contact surface is maximized by the use of spray nozzle(s) and duration of contact is optimized in the heating trays.

To remove non-condensible gases from the water (deaeration) the water temperature must be raised to the boiling point. The solubility of a gas is dependent upon the temperature of the water and the partial pressure of the gas in contact with the water. When the temperature of the water is at the boiling point for the operating pressure, the solubility of the gases is zero.

Rendering gases insoluble by heating to the boiling point does not in itself eliminate the gas from the mass of water. In order to escape from the mass of water, the gas must diffuse through the surface film surrounding the particle of water. Repeated agitation and breaking up of the water by passing it through sprays and over trays and through a steam atmosphere, which is maintained by venting, causes rapid diffusion and elimination of the gases.

PRINCIPLES OF OPERATION

The Thermaflo Engineering Uni-Pac deaerator consists of the following essential parts:

1. Deaerator Shell
2. Water Chamber and Spray Nozzles
3. Downcomer and Water Seal
4. Trays
5. Storage Compartment
6. Water Inlet Flow and Overflow Controls

Water enters the pre-heating compartment through stainless steel, spring-loaded spray nozzle(s). The water is sprayed downward in a finely divided state into an atmosphere of steam where the water is heated to practically steam temperature. This spraying and heating results in a major portion of the dissolved gases being separated from the water. The sprayed and heated water falls to the bottom of the pre-heating compartment from which it flows through the downcomers to the water seal in the tray compartment.

The heated and partially deaerated water passes from the water seal to the trays where the final deaeration is accomplished. The water seal blocks the steam from bypassing the tray compartment into the pre-heating compartment and prevents non-condensible gases from entering the tray compartment from the pre-heating compartment. The water cascades downward in small streams through the tray stack. The water is continuously subjected to the scrubbing action of the concurrently flowing steam. The arrangement of trays is such that a complete redistribution of water is accomplished at each layer of trays. The heated and deaerated water flows from the bottom of the tray section to the storage section where it is blanketed by steam and maintained at or near the temperature of saturated steam under the operating pressure.

Steam is introduced to the deaerator through a connection in the shell and discharged into the space above the trays in the tray section. The steam flows downward through the tray stack. Because the water entering the tray compartment is heated and the bulk of non-condensible gases was removed in the pre-heating compartment, practically no condensation of steam occurs in the tray compartment. Therefore, the entire volume of steam is employed in the scrubbing action which removes the final traces of oxygen and other non-condensible gases. The steam exits through the bottom of the tray stack and flows outside the tray compartment to the preheating compartment where the major portion of the steam is condensed in heating the water. A very slight amount of steam and non-condensible gases is discharged to atmosphere through a vent located in the top of the unit.

Make-up water is controlled by means of the water level in the storage compartment operating through a level control and a regulating valve which can be either mechanical or pneumatic. Condensate and returns which are at least 20° F below the temperature corresponding to the minimum operating steam pressure are introduced downstream of the regulating valve and enter through the same spray nozzles as the make-up water. Any returns which would flash into steam when introduced into the deaerator are piped to the high pressure trap return connection. The flashed steam follows the same path as the steam described above and assists in the scrubbing of pre-heated water.

The customer should provide a check valve in the condensate inlet line close to its junction with the cold makeup water inlet line. This check valve should open toward the deaerator. Its purpose is to prevent the entrance of cold make-up water into the condensate line when no condensate is flowing or when condensate pressure is less than deaerator pressure.

The customer should also provide a pressure reducing valve to supply live steam during conditions when the normal exhaust steam supply is not sufficient to maintain a continuous positive steam pressure in the deaerator. The steam reducing valve should be controlled from the steam space of the deaerator. A 3/4" connection on the deaerator is provided for this purpose. Do not control this valve from a connection in the piping downstream of the reducing valve because this will result in a lower pressure in the deaerator than is required, particularly when the valve is located a great distance from the deaerator. The reducing valve should be sized to supply the entire steam requirement i.e., a capacity in pounds per hour equal to one sixth of the rated capacity of the deaerator. The reducing valve should be set to open at least 4 psig below the normal deaerator pressure, and to close at 2 psig below the normal deaerator pressure. In no case should the reducing valve be set to open at less than 2 psig above atmospheric pressure. If a shut off valve is provided in the exhaust steam line ahead of the deaerator, Thermaflo Engineering recommends introducing the live steam upstream of this valve so that the deaerator can be cut off from both steam sources when it is necessary to inspect the unit. Thermaflo Engineering also recommends installing a shut off valve in the live steam line upstream of the pressure reducing valve. This is necessary because the pressure reducing valve is equalized to the steam space of the deaerator and when the shut off valve in the exhaust steam line is closed and the deaerator pressure decreases, the pressure reducing valve will open and supply live steam to the exhaust line. This steam will then be released to atmosphere through the main relief valve which is protecting the exhaust system. To prevent this waste of steam, the shut-off valve in the live steam line is closed for inspection of the deaerator.

OPERATION

PRELIMINARY

Before placing the unit into service for the first time, carefully check the following:

1. Check the installation of the trays and spray nozzles to insure proper installation.

2. All dirt and foreign material have been removed from the inside of the deaerator and storage tank shells and from the piping and accessories.

3. All piping should be tight, properly supported, and assembled in accordance with Thermaflo Engineering's drawings.

Before placing the unit in service or when it has been out of service for an extended period of time, be sure that:

1. All piping or any access openings repaired or taken down have been closed or secured in place.

2. Relief valves and vacuum breakers are in proper working condition. The relief valve should be lifted by hand while starting up to check proper working conditions.

3. The following valves should be closed: steam isolation, water isolation and pump supply isolation.

4. Be sure that all manual valves for controls, indicating devices, warning devices and protective devices are open, and that all other valves are closed.

PLACING EQUIPMENT IN SERVICE

Procedure for placing the equipment in service is outlined as follows:

1. Open the vent valve to atmosphere wide. If the unit has a vent orifice plate, completely open the vent bypass valve.

2. Open the water inlet valve and allow the storage section of the deaerator to fill slowly.

3. Note the water level in the gauge glasses and set level controls and alarms as the level reaches that particular control point.

4. Close the water inlet valve being used to fill the storage space.

5. Drain the storage space. When the storage tank is empty, shut the drain valve.

6. **SLOWLY** open the valve in the steam inlet line to a position little more than "cracked". Leave the valve in this position until the unit has been fully heated to the operating temperature and steam is flowing freely out of the vent valve.

7. Open the steam inlet valve wide.

8. When the unit is fully heated, again tighten bolts on all flanges and manhole covers.

9. If there are any condensate return lines or trap discharge lines connected to the deaerator, slowly open the valves in these lines and allow the unit to fill to the working level. If no condensate returns are available, use the make-up inlet control valve by-pass line to fill the storage tank to the working level. Open this valve slowly to avoid pressure loss in the deaerator. Close the valve(s) once the operating level has been reached.

10. Slowly open the valve in the makeup water line and let the makeup regulating valve take control. Re-check the operating level in the storage tank for proper operation of the make-up regulating valve.

11. Slowly open the isolation valve in the pump supply line. Open the valve in the pump supply line.

12. If practical, the initial effluent water from the deaerator should go to waste or to a source utilizing water that does not need to be completely deaerated until the effluent water has reached a temperature approximately the temperature of saturated steam at the operating pressure in the deaerator.

13. Close vent orifice by-pass valve if used and adjust vent valve as described under normal operations.

NORMAL OPERATION

During normal operation the vent valve should be throttled so that there is always a short plume of escaping steam apparent. The vent valve should be throttled to maintain the vent rate at the minimum consistent with efficient operation of the deaerator.

If the vent valve is throttled too much, air and non-condensible gases will accumulate in the deaerator. This condition will result in a decreased heating, and incomplete deaeration. This condition is known as air blanketing and results from an insufficient vent rate.

The temperature of the deaerated water should always be within one to three degrees of the steam temperature in the operating space of the deaerator. A wide variation in these temperatures may be due to air blanketing resulting from an insufficient vent rate. The vent rate may be increased by opening the manually operated air vent valve.

TROUBLE SHOOTING

A. Symptom

Insufficient heating (Difference of 3° F or more between saturation temperature, corresponding to steam pressure in unit and outlet water temperature). Excessive oxygen content in the deaerator effluent.

Cause & Remedy

1. Insufficient venting. Before making any adjustments, check thermometers for accuracy. A lower temperature in one thermometer may be caused by internal air blanketing. Increase vent rate by opening the manually operated air vent valve and recheck thermometer.

2. Insufficient steam pressure reducing valve improper operation or hookup. Check valve for free operation and make certain that control line is connected to the fitting provided on the deaerator for this purpose and not to the piping downstream of the valve. Ensure that adequate steam is available.

3. Improper spray from nozzle. Check nozzle for sediment, deposit on seat, a broken spring or other damage.

4. Excessive free air due to leaking stuffing boxes on pumps upstream of deaerator which have negative suction head. Repair stuffing box or seal with water or install free air vent trap in water inlet line to deaerator.

B. Symptom

High Water Level/Low Water Level

Cause & Remedy

Improper operation of level controls or inlet control valve. Adjust as necessary.

C. Symptom

Unable to maintain deaerator pressure.

Cause & Remedy

1. Check for faulty operation of steam pressure reducing valve.

2. Check relief valves on the deaerator and in the main steam supply system for proper operation.

3. Check for adequate steam supply to deaerator.

D. Symptom

Excessive steam pressure losses through deaerator. Check pressure gauge on steam supply and compare with pressure gauge on deaerator shell. The difference in pressure should not exceed 1-2 psi.

Cause & Remedy

Sediment and deposits. Check trays. Remove and clean if necessary.

Chemical Treatment

Chemical treatment companies all have different viewpoints about boiler water treatment. Thermaflo Engineering is not responsible for chemical treatment and its effects to our equipment. If we suspect in any way that a chemical company has incorrectly applied chemical, the warranty is void. It is the full 100% responsibility of the user or owner to correctly apply chemical to our Deaerators and Surge Tanks.

SHUTTING DOWN

To remove the deaerator from service, proceed as follows:

1. Close all water, condensate and trap return inlet valves.

2. Close the steam inlet valve and steam pressure reducing valve, if any.

3. Open vent valve wide.

4. Close the pump supply valve.

5. If the unit is to be out of service for an appreciable period, drain the storage tank through the drain valve.

CAUTION NOTE

WATER HAMMER

Severe water hammer can damage equipment. The following precautions should be taken to minimize:

1. Avoid abrupt changes in operating conditions.

2. Provide adequate proportional band for flow and pressure control.

3. Design water piping to minimize any pockets or traps where steam may form or accumulate during periods of zero, or low flow.

4. Make certain that check valves and other devices to prevent drainage of piping are properly installed and operative.

OPERATING CONDITIONS CONTRIBUTING TO WATER HAMMER

A pressurized system containing water at a temperature equal to the corresponding steam pressure must have its flow and pressure conditions changed slowly to avoid water hammer. "Slowly" is a function of time (from seconds up through minutes) which will vary with each plant and with the various pieces of control equipment in the system.

Water hammer damages equipment and results from changes in velocity components, such as those occurring when steam is collapsed or large volumes of hot water are permitted to flash to steam, causing a mixture of water and steam in vessels and piping, which disrupts their normal flow paths in the system. Steps should be taken to avoid operating conditions described below which may cause water hammer:

1. DECREASING STEAM PRESSURE

   A decrease in the operating pressure of a deaerator can be caused by:

   A. Insufficient steam flow to heat incoming water.
   B. Planned decrease in operating pressure.

   EFFECT

a. Pressure drops below the flash point of the water stored in the deaerator, causing false level indication and/or measurement in the storage tank.
b. Flashing can occur downstream of the unit to the boiler feed pump if the pressure is decreased too rapidly, causing the pump to receive a mixture of water and steam bubbles.
c. If the incoming water is at a temperature above the boiling point corresponding to the reduced pressure, flashing will occur in the water inlet piping upstream of the deaerator.
d. Level control equipment will hunt wildly, aggravating the problem.

REMEDY

Change operating conditions slowly to allow control equipment to respond, avoiding loss of pressure flashing of large quantities of water. This time will be a function of the flow rate through the system and the response time of the control equipment.

2. LONG IDLE PERIODS

A period of no water flow into the deaerator can cause the following:

A. Water can drain from distributors and inlet piping and be replaced by steam.
B. The water will be boiled out of the distributor, leaving steam.
C. Leaky check valves can permit flow back, draining inlet piping.

EFFECT

Rumbling, water hammer and possible damage on startup.

REMEDY

When re-establishing flow, do so at a slow rate. Make certain valving (especially, check valves) are seated properly and tight. Long idle periods cannot be avoided, but the problems associated with them can be minimized by having all water inlet piping come from below the unit and not above the water inlet connections.

3. RAPID INCREASE IN WATER FLOW RATE

A rapid increase of flow can be caused by:

A. Level control equipment not adjusted to a wide enough proportional band to smooth out surges by using some of the water in storage.
B. Uncontrolled dumping of water to the deaerator.
C. An oversized inlet regulating valve.
D. Excessive water pressure at the inlet side of the “inlet regulating valve”.

EFFECT

a. See No 1, rapid decline in steam pressure, Cause "A".
b. Flooding of unit if flow rate exceeds overflow capacity or if pressure is decreasing and level control equipment is hunting due to flashing and turbulence in the storage section.
c. If unit has been idle, flashing and rumbling in water inlet line and distributors.

REMEDY

a. Adjust water inlet control to start flow into unit at a slow enough rate to avoid rumbling or flashing in the water inlet system.
b. Adjust steam control equipment to respond to the highest surge rate expected.
c. Adjust level control proportional band to admit water slow enough to avoid collapsing large volumes of steam which may be in the inlet water lines and distributors, and to allow sufficient time for the steam control equipment to respond.
d. Overflow equipment capable of handling maximum dumping rate of water.

MAINTENANCE

GENERAL

When the unit has been shut down, drained, and cooled sufficiently in accordance with all safety precautions, remove the manhole cover plate, loosen bolts on upper tray retaining bar and slide bar upward so that the trays can be removed. Inspect and, if necessary, clean the trays and storage space. Inspect, clean, and repair or replace any parts such as spray nozzles, trays, etc. which are broken or show excessive wear.

TRAY CLEANING

Remove the trays from the tray compartment and inspect for deposits or damage. If appreciable deposits are present, remove them by dipping the trays in a 10% solution of inhibited muriatic acid (35% HCL diluted to 10% strength). Muriatic acid which is already provided with an inhibitor can be purchased from most chemical suppliers. In purchasing the muriatic acid, specify "to be inhibited to prevent attack of steel while dissolving calcium carbonate scale". Muriatic acid as purchased will contain approximately 35% HCL. After cleaning, the trays should be washed in plain water or dipped in a 10% solution of soda ash to remove the acid solution. **ALL SAFETY PRECAUTIONS TO MINIMIZE THE DANGER OF HANDLING ACID MUST BE OBSERVED IN THE PERFORMANCE OF THE CLEANING OPERATION.**

SPRAY NOZZLES

(T-24 through T-48 only):

The spring-loaded spray nozzle should be inspected to make sure that it is free of sediment and deposit. The valve seat must be kept free and clean to insure effective spraying of the water. The spray nozzle is removed by loosening the nuts on the water inlet head and removing the two 1/2" diameter lock nuts on the spray nozzle.

(T-54 through T-120 only):

To remove and inspect the spring-loaded nozzles, the trays and the access door cover in the preheater section floor must be removed. The cover is held in place by several nuts. After the nuts and cover are removed, access is gained to the preheater compartment. The spray nozzles are removed by loosening the two nuts on each spray nozzle.

Note: When re-installing spray nozzles, make sure new gasket is seated properly. Install nozzle using two new lock-nuts and do not over-tighten.

(All Models):

During operation gauge glasses, pressure gauges and thermometers should be kept clean. Thermometers and gauges should be checked periodically for accuracy. A quick check can be made by switching the thermometers and noting any change in the temperature or the difference in temperatures recorded when the thermometers are reversed. Another quick check on thermometer accuracy can be made by immersing the thermometers in boiling water. The indicated temperature should be the boiling point of the water.

Protective devices, such as the relief valves, vacuum breakers, etc., should be hand-operated or tripped periodically to ensure proper operation. Follow all safety precautions as outlined on pages 1-4 before operating equipment.

RECOMMENDED PROCEDURE FOR STORAGE

INTERNAL MAINTENANCE

Vapor Absorption All openings are to be sealed and taped and a vapor absorbing chemical installed in the shell. Activated alumina or equivalent in quantities of three pounds for every 100 cubic foot of vessel is normally used.

A rust inhibiting chemical may be used in lieu of or in conjunction with the vapor absorbing chemicals. Application by spray or brush is recommended. The rust inhibitor should be water soluble and is usually removed during the initial flush out. This method is suited for storage periods of six to twelve months depending upon the environment. Longer periods would require that the vapor absorbing chemical be replaced. Some rusting will occur when using this treatment.

Nitrogen Blanketing

WARNING: See the safety section of this manual before entering a nitrogen blanketed vessel.

No internal preparation of the vessel shell is required. This method requires that all openings are tightly sealed, gasketed and/or welded shut.

Dry nitrogen (or other inert gas) is used to purge the vessel until the dewpoint is below that expected at the site. Then the vessel is pressurized to 1/4-1 psi and all air vented.

Blanketed vessels may be stored in any environment for indefinite periods, but a daily checking of the pressure must be made and the nitrogen cylinders replaced as required.

EXTERNAL PREPARATION

EXPOSURE	SUGGESTED PAINT SYSTEM			
	PRIMER COAT		SECOND COAT	
	FIRST COAT	SECOND COAT	FIRST COAT	SECOND COAT
1-Dry Interior Climate	Red Oxide Primer	Not Required	Not Required	Not Required
2-Rural or Light Industrial Areas	Red Oxide Primer	Not Required	Not Required	Not Required
3-Frequently Wet Climates	Red Oxide Primer	Red Oxide Primer	High Build Polyamide	Not Required
4-Continuously Wet Climate	Inorganic Zinc	Inorganic Zinc	High Build Polyamide Epoxy	Not Required
5-Corrosive Areas	Inorganic Zinc	Inorganic Zinc	High Build Polyamide Epoxy	High Build Polyamide Epoxy

NOTE: Check contract with Thermaflo Engineering for actual paint system used. Thermaflo Engineering typically furnishes only a primer coat because shipping may damage paint finish. Second coat applied at storage site by customer when required.

WARNING: Paints may contain poisonous fumes. Always make sure paint is applied in a well ventilated area.

In selecting the type of external preparation, consideration must be given to the environmental conditions and maintenance provisions available. Exposure environments are arranged in the table in order of increasing severity.

Paint systems for condition No. 1 usually consist of a single coat of red oxide primer. For the remaining conditions, paint systems would normally consist of one or two coats of rusting inhibiting primer and one or two finish coats, depending on the severity of the conditions. Before selecting painting systems and materials for conditions No. 3 through 5, consideration must be given to the specific climate condition at the storage site.

Where day-night temperature changes exceed 30° F, special attention should be given to the preparation of the metal surface and selection of the primer paint. Under these conditions, the metal surfaces should be blast cleaned to remove all mill scale which might otherwise flake off due to expansion and contracting of the vessel. The type of primer and finish system selected should be compatible with the particular expansion characteristics of the vessels and the final operating temperatures.

SUGGESTED PRIME AND FINISH COATS

Primer Coat:	Red Oxide Primer	Sherwin Williams Company
	Inorganic Zinc	Carboline Corporations
Finish Coat:	Polyamide Epoxy	Porter Company Zinc-Lock
	No. 500 Series	

Surface Preparation

Application and dry film thickness are to be in accordance with the manufacturer's recommendations for the paint selected.

MAINTENANCE REQUIREMENTS

Short-Term Storage (up to 12 months)

The absorption material should be removed after 3 months or replaced as required. Remove saturated absorption materials and replace with dry absorbent from unopened sealed container. The exterior portions of the shell are to be visually inspected periodically.

Long-Term Storage (over 12 months)

The inert gas cylinders and vessels must be checked weekly for any loss of pressure and replaced as required. The exterior portions of the shell are to be visually inspected periodically and the finish repaired as required using the finish paint specified.

EQUIPMENT

SHELL

The deaerator shell is a vertical cylindrical unit of steel construction and is mounted on a horizontal, cylindrical, welded steel storage tank.

SPRING-LOADED SPRAY NOZZLES (T-24, 30, 36, 42, 48)

The water preheater consists of a single inlet spray nozzle for projecting the inlet water into the steam atmosphere of the deaerator. The nozzle divides the water into a spray throughout the preheater section of the deaerator.

(T-54 thru 120)

The water preheater consists of an inlet connection and, an internal chamber with multiple spray nozzles. The inlet chamber delivers water to the spray nozzles. The nozzles spray the inlet water into the steam atmosphere of the deaerator.

The preheater should be inspected periodically to make sure that it is free of sediment and deposit. Spray nozzles should be inspected for any undue erosion, worn or broken parts. Spray nozzle seats must be kept clean to ensure even distribution of water in the preheater.

WATER SEAL

The water seal is a steel trough which receives the water from the pre-heating compartment through the downcomers and distributes it over the trays.

TRAYS

The tray compartment is provided with stainless steel trays. When handling stainless steel trays, Thermaflo Engineering recommends that the installing personnel wear gloves to avoid cutting their hands on the sharp edges of the trays.

The trays should be installed in stacks which are side by side with their long dimensions at right angles to the tray supporting beams and the spilling edges of the water seal.

Refer to the tray installation instructions in this manual for installation instructions for the trays. Refer to the table on page 27 for the correct stack height and quantity of trays for your deaerator.

DIRECT CONTACT VENT CONDENSER AND PREHEATING COMPARTMENT

To ensure complete deaeration and to prevent air blanketing, it is essential that a continuous sweep of steam be maintained through the deaerating and the direct contact vent condensing preheater sections. During normal operation, a steady plume of vented vapors and steam should be discharged continuously from the vent valve on the deaerator top.

Insufficient venting will result in air blanketing. This condition is cumulative and will eventually lead to incomplete deaeration. Adjustment of the vent valve to increase the vent rate will remedy this condition.

REGULATING VALVES

Inlet water regulating valves are utilized to control the water flow to the deaerator. For those installations in which the pressure differential across the valve at shut-off is low, a double disc regulating valve is used. When higher pressure differentials are encountered across the valve at shut-off, a pilot actuated or air-operated diaphragm type regulating valve is used.

Double Disc Type

This valve must be installed in a horizontal line. With the valve closed, the upstream pressure is imposed on the underside of the upper disc and the top side of the lower disc, partially balancing the moving parts. Valves are of the rising stem type. The yoke carrying the link and the guide for the operating lever is held to the bonnet by a lock nut and can be set in any position.

Pilot-Actuated Type

These single seated, internal pilot type, lever valves are used wherever a tight closing mechanical valve is required. Installation must be in a horizontal line with the arrow marked on the body casting pointing in the proper direction. The valve linkage may be rotated 360° .

When a 1" or 1 -1/2" valve is closed, upstream pressure is applied on the top side of the main valve disc, holding the disc on its seat. When the operating lever is raised, the pilot valve is opened; thus, releasing the pressure above the piston. The upstream pressure is applied to the underside of a piston, which forms the upper section of the valve disc, and raises this disc from its seat.

In the 2" and larger valves, the upstream pressure is under the valve disc. The basic operation is the same as the smaller valves; however, this design utilizes the inlet pressure to open and close the valve. This method is used on the larger valves to prevent sudden closing when the valve disc approaches its seat.

Air-Operated Type

This type valve is maintained open by a spring and is closed by the application of air pressure to the top of the diaphragm. The valve throttles as the valve movement is controlled by air pressure supplied by the pilot valve of the level controller. The controller can be either the float box or the displacement type and responds to water level variations in the deaerator. This valve opens on loss of air pressure, but it can be furnished so that it closes on loss of air pressure.

The controller is located at an elevation corresponding to the working water level in the deaerator. Instructions for adjusting the sensitivity of control and the liquid level range are contained in the cabinet housing the control equipment. The sensitivity of control should be adjusted according to the operating and load conditions of the installation. If the sensitivity of the control is too great, i.e., snap acting, the regulating valve will tend to open and shut excessively at constant loads. Oscillation from full open to closed or full load to no-load operation of the deaerator will result from a low continuous demand from the storage section. This condition should be avoided because the load fluctuations imposed on the deaerator by the control rather than the load demand will result in unsatisfactory operation of the equipment and reduced deaeration. If the sensitivity of the control is not great enough, the regulating valve will lag behind load demands. In the change from a low load to a high load, much or all of the storage

capacity may be required if the control is not adequately sensitive. In the change from a heavy demand to practically no demand, the control may lag to the extent that the overflow level is exceeded. The sensitivity of control should be adjusted so that any momentary load surges will be dampened or averaged out by the lag in inlet regulation, but any permanent load change will be anticipated in sufficient time to prevent a dangerous drainage of available storage capacity or an overflow condition.

CONNECTING REGULATING VALVES TO FLOAT CONTROL

Bring the level in the storage tank up to the "closing line" and open the gate valves in both the water and steam equalizing lines and let the water level rise in the float control to the same level as in the storage tank.

Connect the float lever and the valve lever by means of the reach rod. Loosen the float lever from the float spindle by backing off the lock-nut on the float spindle. Then, while the weight of the float is not affecting the assembly, bring the system into balance by moving the counterweight.

With water in the tank and in the float control (if used) at the closing line, move the regulating valve to the shut position and secure the float lever to the float spindle.

The customer is required to make up the loose ends of the reach rod which is furnished with extra length to permit cutting and fitting to suit. Before cutting the reach rod, be certain that the float is in the down position with the lever arm up and that the regulating valve is in the open position, that is with the counterweight in the down position and the lever arm in the up position. Then measure, cut, and fit the reach rod.

RELIEF VALVE (SEE PAGES 1-4 FOR SAFETY PRECAUTIONS)

A relief valve connection is furnished on the top head of the vessel. The relief valve whether furnished by Thermaflo Engineering or by others is provided to give warning of excess pressure in the deaerator, particularly when the deaerator is out of service and high pressure returns (such as trap discharges) have not been shut off. **THIS RELIEF VALVE PERFORMS ONLY A WARNING FUNCTION AND IS NOT CAPABLE OF PROVIDING OVER PRESSURE RELIEF FOR THE VESSEL OR THE STEAM SYSTEM.** The deaerator and steam system as a whole must be protected from excess pressure by large capacity relief valves such as a Thermaflo Engineering Multiport Relief Valve in the steam supply to the deaerator.

The relief valve should be operated by hand periodically and while starting up the deaerator. This will serve as a check to indicate free movement and proper operation of the valve.

OVERFLOW PROTECTION (SEE PAGES 1-4 FOR SAFETY PRECAUTIONS)

The deaerator is provided overflow protection by means of either a drainer, a double disc overflow trap, a loop seal overflow, or an air-operated valve.

It should be noted that whether or not the hot overflow goes to waste, no valve should be put in the discharge line. A closed valve in the overflow discharge line would permit the water level in the deaerator to build up and overflow into the steam inlet line with probable damage resulting to the auxiliaries supplying the steam.

When the overflow discharges to waste, a significant quantity flashed steam will be produced. Consideration should be given to carefully anchoring the overflow piping and to the possible damage to sewer piping. **IF THE DISCHARGE IS INTO AN OPEN FUNNEL CONNECTION TO THE SEWER, THERE IS ALSO THE POSSIBILITY OF FLASHED STEAM INJURING AN OPERATOR.** The discharge should never be admitted to a common drain line carrying low temperature drainage water because serious water hammer may result due to the condensation of the flashed steam. For these reasons the installation of a blowdown tank to receive the discharge should be considered.

Drainer

The Thermaflo Engineering Multiport Drainer is a rotary valve, float-actuated trap. Water in the overflow pipe enters the body of the drainer and raises the float which opens the rotary valve. The valve remains open until the water level in the drainer body is lowered and the skimmer or overflow standpipe is drained, dropping the float and closing the valve.

Care must be taken to keep the overflow lines free of debris before installing the drainer. The drainer is installed with the elevation of the top of the drainer below the overflow level. Periodically the drainer should be tripped by hand or the tank should be allowed to overflow to make sure that the valve operates freely.

When this type of overflow control is in its closed position, a small amount of steam vapor may be observed at the outlet. This is normal.

Overflow Trap

The valve construction of the double disc overflow trap is similar to the corresponding type of regulating valve. This type of overflow trap is for deaerators operating under 15 psig. Care must be taken to keep the overflow lines free of scale and debris before installing the overflow trap. The double disc overflow trap is installed with the elevation of the top of the float chamber below the overflow level. The top of the float chamber is to be equalized to the steam space of the chamber from which overflow is taken. Periodically the tank should be allowed to overflow to make sure that the valve operates freely. When this type of overflow control is in its closed position, a small amount of steam vapor may be observed at the outlet. This is normal.

Air-Operated Overflow

The air-operated diaphragm type overflow valve is maintained open by a spring and is closed by the application of air pressure to the top of the diaphragm. At normal operating levels in the deaerator storage section, the valve is held closed by air pressure on the diaphragm.

An increase in water volume to the overflow level actuates the normally energized mercoid switch. This increase of level in the switch float chamber, raises the float which in turn de-energizes the solenoid valve, and allows the air from the diaphragm to bleed off and open the overflow valve.

INSTRUMENTS (supplied only when ordered)

Thermometers

Thermometers are the local indicating type. They are supplied to indicate the steam temperature in the deaerating space and the temperature of the deaerated water in the storage section. The scale and range of these thermometers are dependent upon the operating characteristics of the installation. Thermometers are of the separable socket type and are attached to the separable sockets by union connections.

The thermometers serve as a check on deaeration. The water thermometer should register a temperature which is within one or two degrees of the steam thermometer temperature. If the thermometers are accurate and the difference in their readings is greater than one or two degrees, increase the opening of the air vent valve so that non-condensible gases are released to the atmosphere.

If the thermometers are not supplied, plugged connections for the thermometers are provided on the deaerator.

Pressure Gauges

The pressure gauges are the Bourdon tube type commonly used to indicate steam pressure. A pressure gauge is desirable to indicate the operating pressure in the steam space of the deaerator.

If a pressure gauge is not supplied, a plugged connection for the pressure gauge is provided on the deaerator.

Special Devices

Low level and high level alarm switches can be provided. These alarm switches, used in conjunction with a warning device, alert the operator of an abnormal level condition.

REPAIR AND REPLACEMENT ORDERS

The handling of repair and replacement orders will be facilitated if the following instructions are carefully followed:

1. Indicate the shop order (S.O.) number as it appears on the nameplate of the deaerator.

2. Designate the parts required by the item number and name which appear on the parts illustrations or reference prints.

3. When ordering parts for accessory equipment such as valves for controls, describe briefly and provide the serial number of the accessory.

4. Specify the quantity of each part required.

5. Give complete shipping instructions.

Thermaflo Engineering has representatives nationwide who will be glad to assist you, and to whom orders for parts should be given to ensure prompt and efficient handling.

In returning parts to the Thermaflo Engineering Plant, be sure that all parts are accompanied with a “return material tag” (RMT). Contact Thermaflo Engineering service department for issuance of RMT.

Deaerating Tray Data			
Deaerator Size T-Series	Tray Size (inches)	Number of Trays High	Total Number of Trays
T-24	6 x 18	24	48
T-30	6 x 18	24	72
T-36	6 x 24	24	96
T-42	6 x 30	24	96
T-48	6 x 30	24	120
T-54	6 x 36	24	144
T-60	6 x 36	24	168
T-66	6 x 36	24	192
T-72	6 x 24	24	384
T-78	6 x 24	24	432
T-84	6 x 30	24	432
T-90	6 x 30	24	480
T-96	6 x 36	24	480
T-102	6 x 36	24	528
T-108	6 x 36	24	624
T-114	6 x 36	24	672
T-120	6 x 36	24	720

Deaerator Tray Outline

SIZE OF TRAY	NOMINAL DIMENSIONS		
	A	B	C
6" X 36"	36"	6"	1"
6" X 30"	30"	6"	1"
6" X 24"	24"	6"	1"
6" X 18"	18"	6"	1"

MATERIAL: STAINLESS STEEL

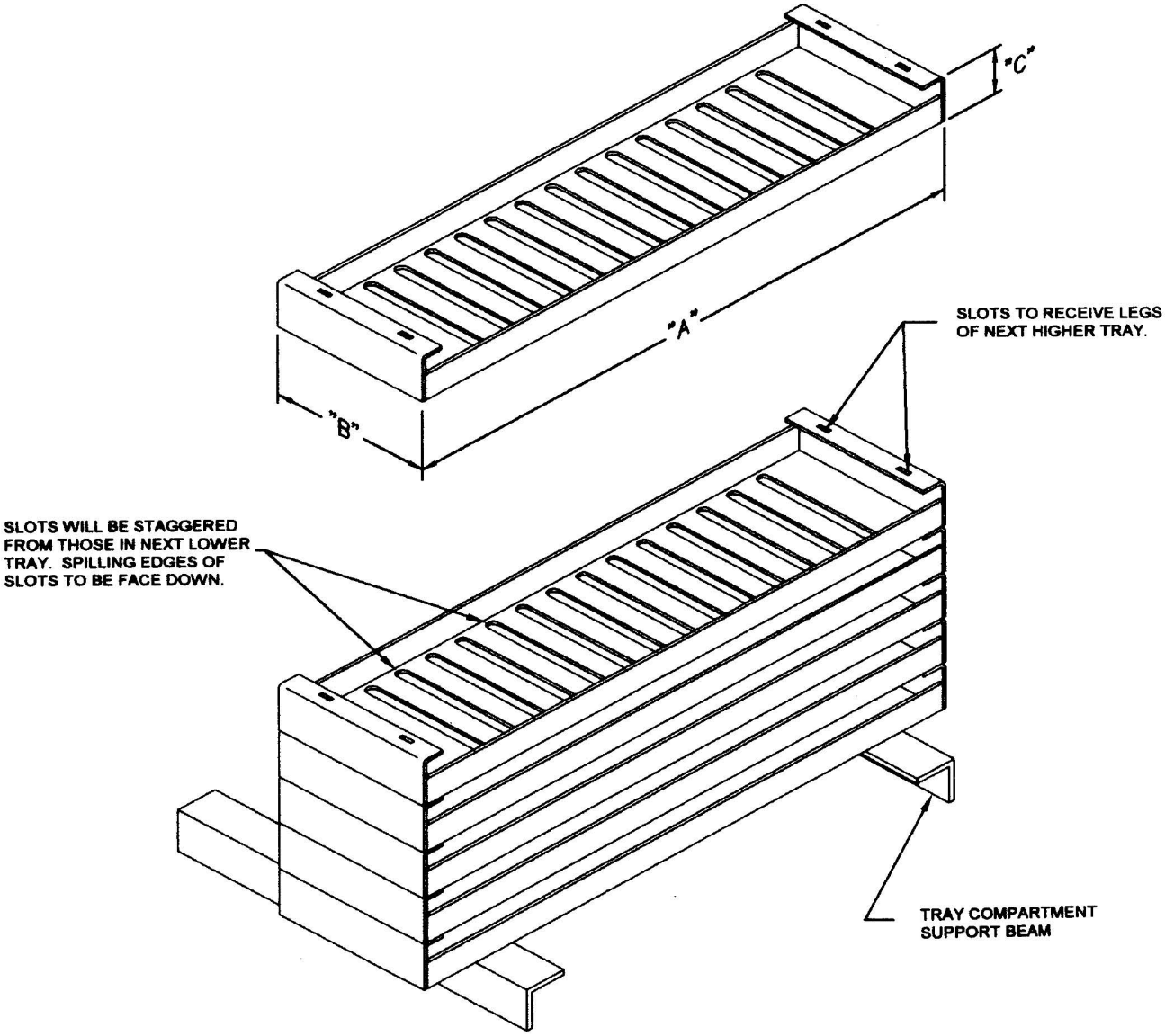

TRAY PD Series INSTALLATION

GENERAL NOTE: AS YOU READ THROUGH THE FOLLOWING STEPS, REFER TO DETAIL “A” or “B” FOR PROPER CROSSSECTIONAL VIEW OF YOUR UNIT. TRAYS REST IN PLACE NORMALLY AFTER STACKING BY WEIGHT. NORMALY HOLD DOWNS NOT REQUIRED

1. REMOVE TRAY DOOR OR MANHOLE COVER. (CHECK GASKET. REPLACE IF NECESSARY.)

2. LOOKING THROUGH THE OPENING YOU SHOULD SEE A SLIDE ENCLOSURE PLATE OR AN INTERNAL ACCESS DOOR. REMOVE THIS DOOR AND PLACE IT INSIDE OF TANK.

3. LOOKING DOWNWARD, THERE SHOULD BE SOME LOOSE PIECES OF GRATING. REMOVE ALL LOOSE PIECES UNTIL ONLY ONE SOLID PIECE OF GRATING REMAINS. IN MOST CASES, THIS SECTION OF GRATING IS TACK WELDED TO STRUCTURAL STEEL SUPPORT ANGLES. THE LOOSE PIECES OF GRATING, WHICH ARE REMOVED (OR SHIPPED SEPARATELY), ARE YOUR TOP SECTIONS OF GRATING.

4. WITH ALL TOP SECTIONS OF GRATING REMOVED, YOU ARE NOW READY TO INSTALL THE DEAERATOR TRAYS. BEFORE INSTALLING, REVIEW CAREFULLY DETAIL "C". IN GENERAL, DEAERATOR TRAYS ARE 6" WIDE X 1” HIGH X EITHER 18”, 24”, 30”, OR 36” LONG AND SHOULD ALWAYS BE STACKED 24” HIGH. IN SMALLER DEAERATOR UNITS (SEE DETAIL "A") THERE IS ONLY ONE BANK OF DEAERATOR TRAYS. IN LARGER DEAERATOR UNITS (SEE DETAIL “B”), THERE ARE TWO (2) BANKS OF TRAYS NEARSIDE AND FARSIDE. FOR MORE DETAILED INFORMATION SEE “TRAY INSTALLATION INSTRUCTIONS” WHICH IS SHIPPED WTH DEAERATATOR TRAYS.

5. **NOTE FOR PD-30 THROUGH PD-60 DEAERATORS (DETAIL “A”)**
AFTER ALL TRAYS HAVE BEEN INSTALLED, SLIDE TOP SECTION OF GRATING ACROSS TRAYS AND UNDER SLIDING ANGLE ON FARSIDE- LOWER SLIDE ANGLE TO MEET GRATING AND TIGHTEN ½” BOLTS. REPLACE SLIDE ENCLOSURE. LOWER IT UNTIL IT RESTS ON GRATING AND TIGHTEN ½” NUTS. THIS SLIDE ANGLE AND SLIDE ENCLOSURE PLATE WILL HOLD THE TRAYS BETWEEN THE TWO SECTIONS OF GRATING CAUSING A SANDWICH EFFECT. REPLACE MANHOLECOVER. THIS COMPLETES THE TRAY HOLD-DOWN DEVICE INSTALLATION.

6. **NOTE FOR PD-72 AND LARGER DEAERATORS (DETAIL “B”)**
AFTER ALL TRAYS HAVE BEEN INSTALLED ON FARSIDE OF TRAY BOX, SLIDE TOP SECTIONS OF GRATING (WITHOUT WELDED LIP ON THEM) ACROSS TOP OF TRAYS AND UNDER SLIDE ANGLE ON FARSIDE. LOWER ANGLE TO MEET GRATING AND TIGHTEN ½” BOLTS. INSTALL ALL TRAYS ON NEARSIDE OF TRAY COMPARTMENT AND SLIDE TOP SECTIONS OF GRATING (WITH LIP) SO LIP OVERLAPS FARSIDE GRATING, (REFER TO DETAIL “B” FOR A PICTORIAL VIEW). SLIDE FLAT PLATE WITH CUPS UNDER THREADED RODS AND LOWER RODS INTO CUPS LOCATED ON FLAT BAR BY TURNING ADJUSTMENT NUT TO A SNUG FIT. REPLACE SLIDE ENCLOSURE PLATE AND LOWER UNTIL IT RESTS ON GRATING AND TIGHTEN ½” NUTS. THE SLIDE ANGLE THREADED RODS AND SLIDE ENCLOSURE PLATE WILL HOLD THE TRAYS BETWEEN THE TWO SECTIONS OF GRATING CAUSING A SANDWICH EFFECT. REPLACE MANHOLE COVER. THIS COMPLETES THE TRAY HOLD-DOWN INSTALLATION.

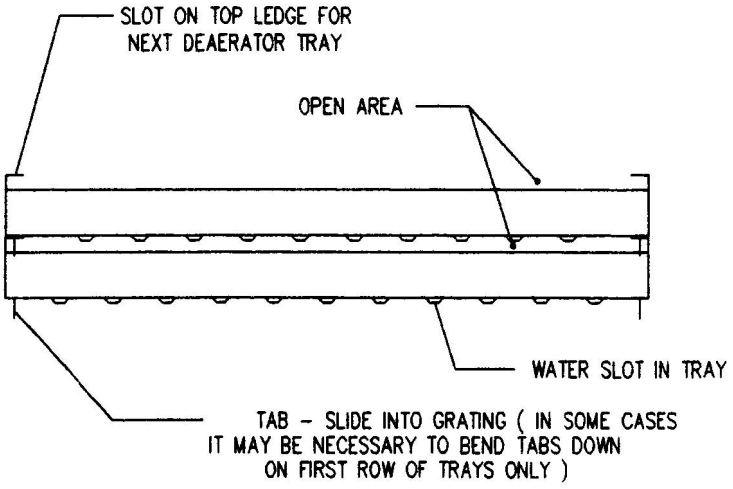

TO INSURE PROPER INSTALLATION OF DEAERATOR TRAYS,
THE DEAERATOR TRAY TABS ALWAYS POINT DOWN AND
THE TABS SLIDE INTO THE UNDERLYING TRAY.

DETAIL "C"
TRAY INSTALLATION

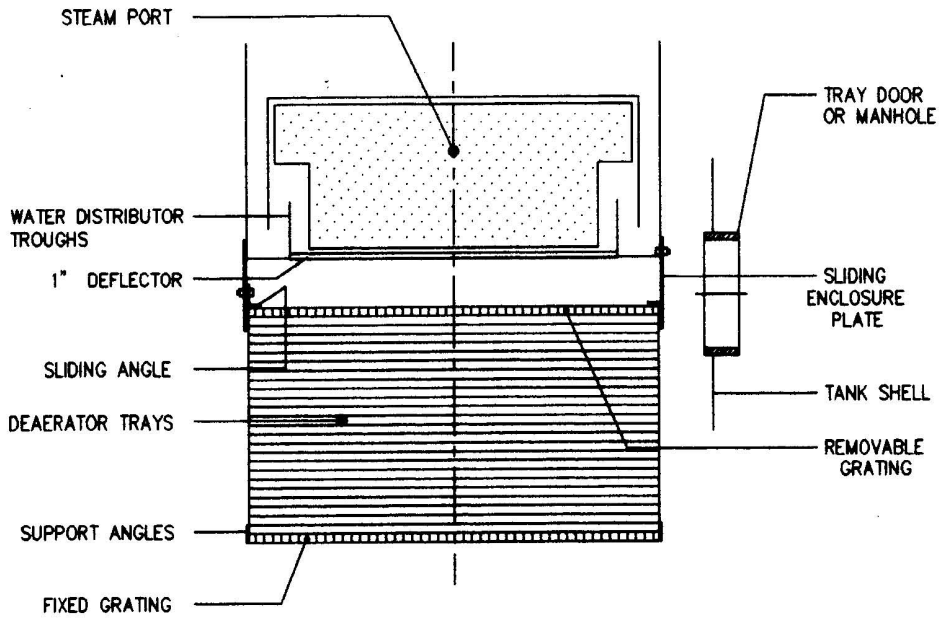

DETAIL "A"

FOR DEAERATORS 60" DIA OR LESS
(T-30 THRU T-60)
(SINGLE TRAY BANK)

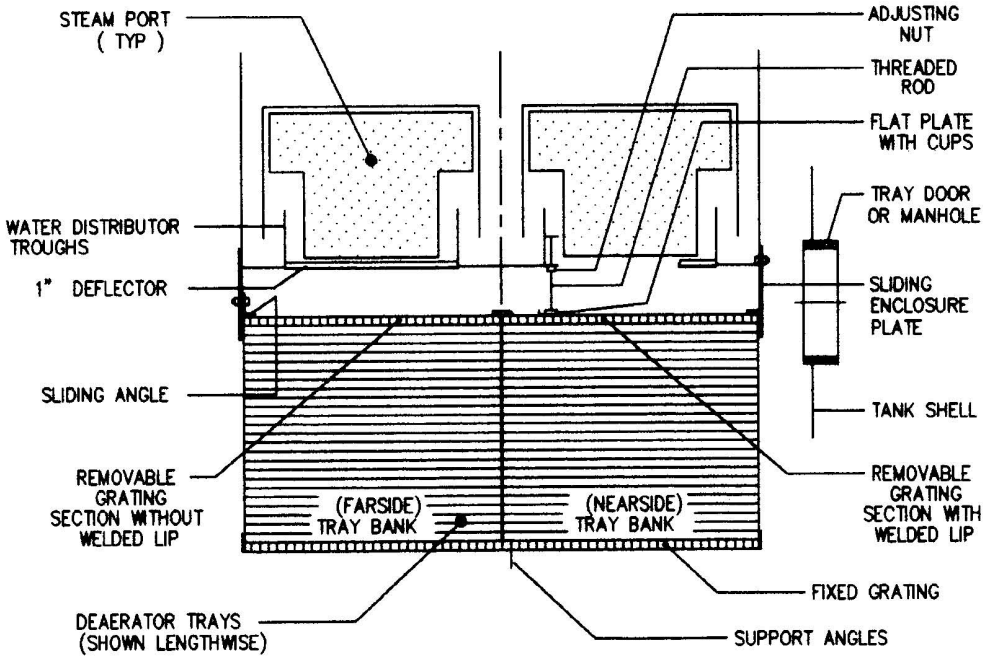

DETAIL "B"

FOR DEAERATORS 72" DIA OR GREATER
(T-72 AND LARGER)
(DOUBLE TRAY BANK)

Spring-Loaded Spray Nozzle

1	2	3	4	5	6	7	8	9	10	ITEM NO.
BODY	SPREADER	LOWER BODY	SPRING	STEM	BUSHING	JAM NUT	GASKET	SPRING RETAINER	ELASTIC HEX NUT	NAME
1	1	1	1	1	1	2	1	1	2	QTY.

SUPPLIED WITH EACH VALVE

- TWO HEX NUT – ½"X 20NF
  MAT'L: SILVER PLATED
  304 ST'N ST'L ELASTIC
  STOP NUT
- ONE SOLID TEFLON GASKET
  UNLESS OTHERWISE SPECIFIED

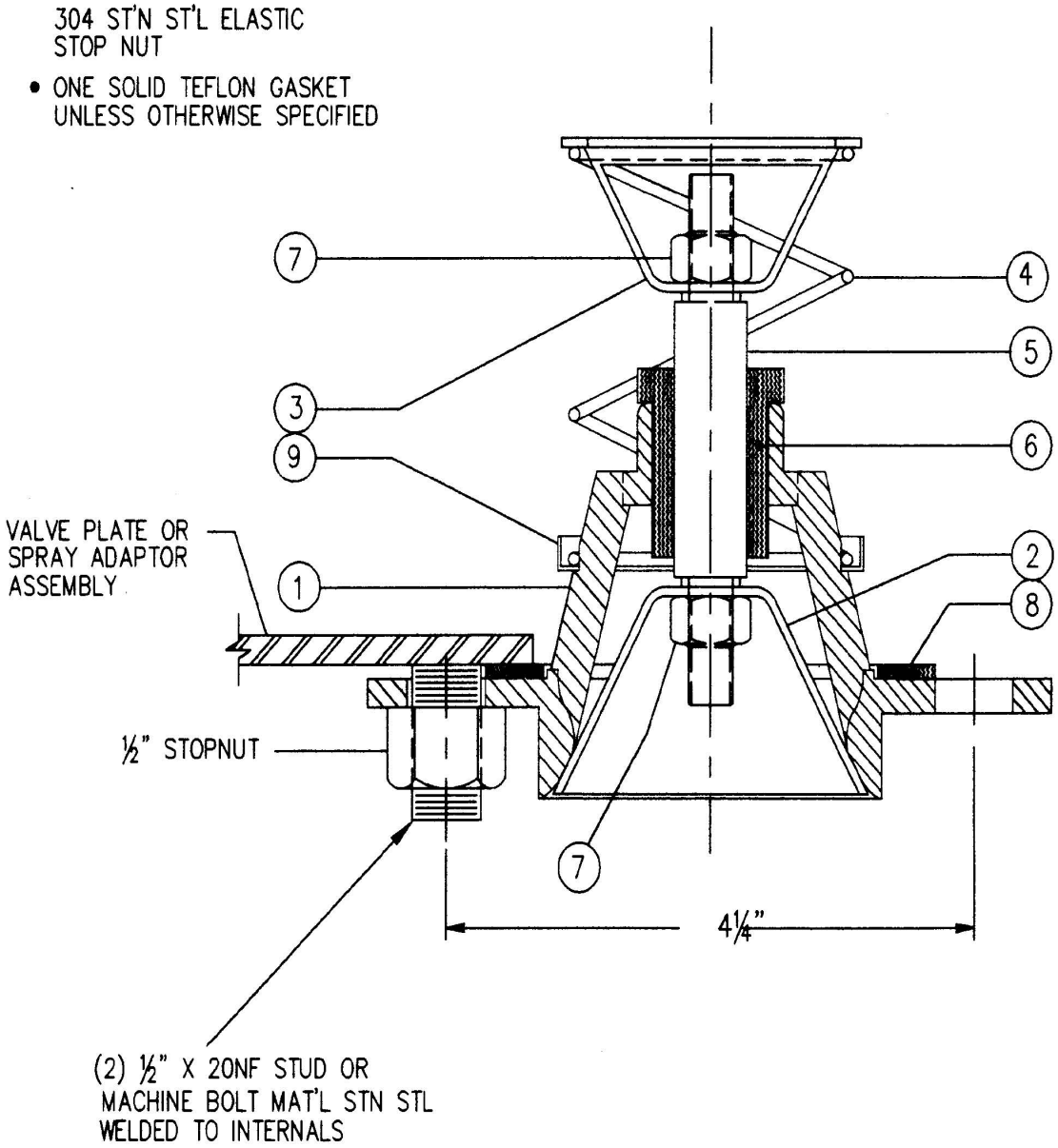

3-D VIEW AND FLOW OF "PD" SERIES DEAERATOR

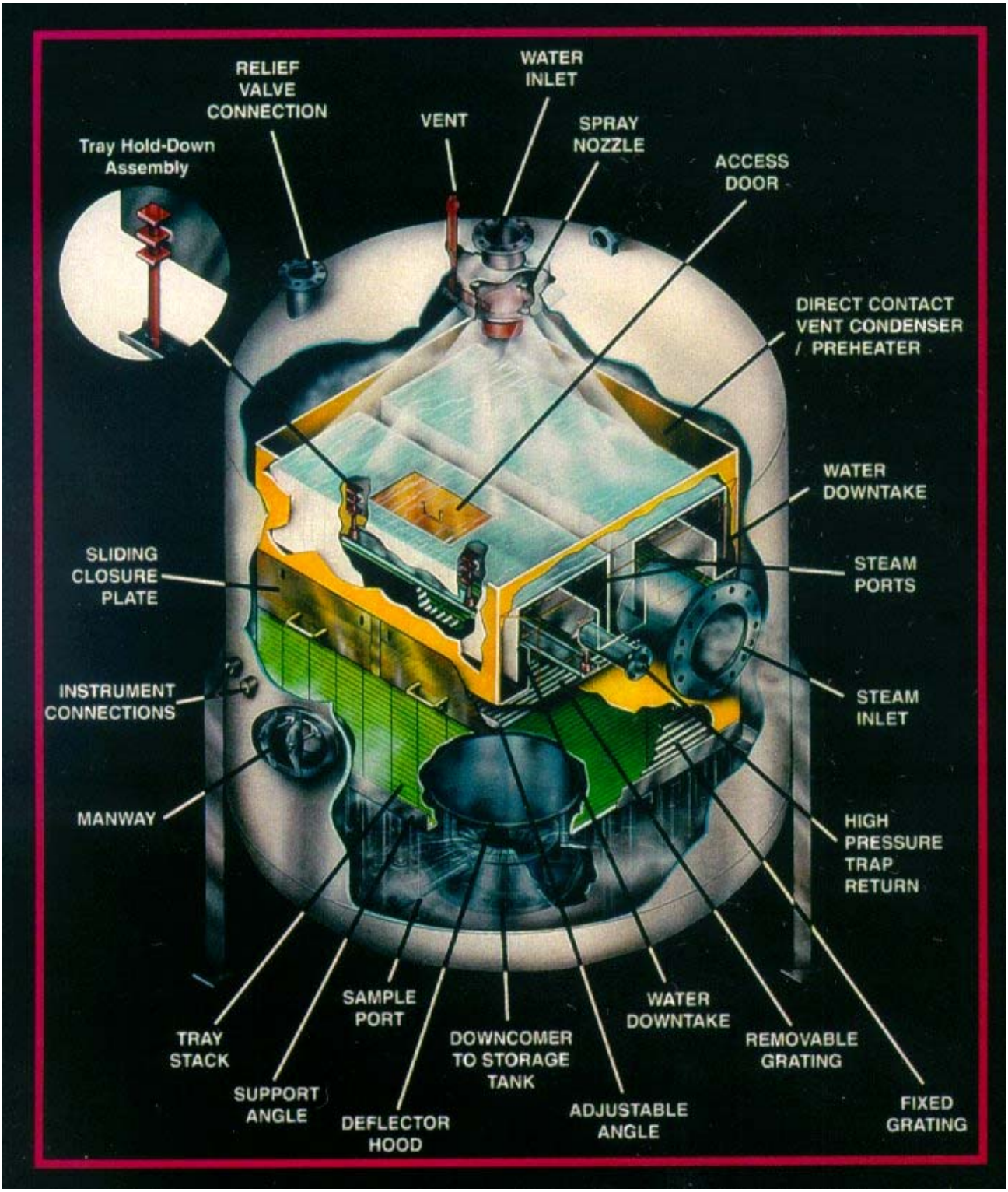

CONTENTS

INTRODUCTION

CAUTION!

*The instructions provided herein should be completely reviewed and understood prior to installing, operating, or repairing this equipment. All **CAUTION** and **WARNING** notes (displayed in boxes) must be strictly observed to prevent serious injury or equipment malfunction.*

Scope

This instruction manual includes installation, operation and maintenance information for Norriseal EVS Liquid Level Controllers.

This product is covered by U. S. Patents 4,700,738 and 6,497,246 B1.

Description

The EVS Liquid Level Controller (LLC) is designed for general-purpose use in liquid level and interface control applications. It uses the patented Norriseal Envirosave™ direct-acting, on/off (snap) pneumatic pilot. The LLC body is back-mounted on the case. Pilot action can be reversed and modulating (throttle) service is optionally available.

The standard EVS Liquid Level Controller is equipped with a 1.88- x 12-in. PVC displacer that can be attached for either horizontal or vertical service. Optional displacer materials, lengths and diameters can be supplied by Norriseal to accommodate a wide range of control applications.

Controller Identification

Controller model numbers are typically 12 positions long (example: 2SM36-BBDB-N). Refer to the product brochure for specific information on the controller nomenclature.

A nameplate attached to the inside of the case includes the controller model and serial number. Also included is information pertinent to the controller assembly, i.e., supply and output pressures, displacer material and rating, body size and material, ANSI class and pressure, and temperature limits.

CAUTION!

Before disassembly or maintenance, all pressures in this device must be relieved. Failure to relieve pressures may result in personal injury or device damage. The resulting uncontrolled venting or spilling of process fluids may cause personal injury, loss of process control or environmental contamination.

WARNING!

Maximum allowable pressures for the level controller body and the maximum allowable pressure at the maximum temperature for the level controller are shown on the nameplate mounted in the case. If pressure to the level controller is capable of exceeding these limits, install relief valves or other over-pressure protection devices in the pressure lines.

CAUTION!

When ordered, the displacer material and configuration were selected to meet particular pressure, temperature, and fluid conditions. Bodies and displacers are limited in their operating pressure and temperature ranges as well as their ability to resist corrosion. Do not apply any other conditions to the controller without first contacting your Norriseal sales office or your sales representative.

Principle of Operation

Force Balance Principle

The operation of the EVS Liquid Level Controller is based on the *Force Balance Principle.* A spring balances the weight of a displacement-type sensor. As liquid rises around the displacer, the amount of force available to the pilot is proportional to the weight of the displaced liquid. The available force is transmitted to the pilot thrust pin through a lever and fulcrum. The higher the level, the greater the available force to the pilot.

The control is *direct-acting* (rising level increases pilot output) when the fulcrum is on the right of the pivot pin as shown in Figure 1.

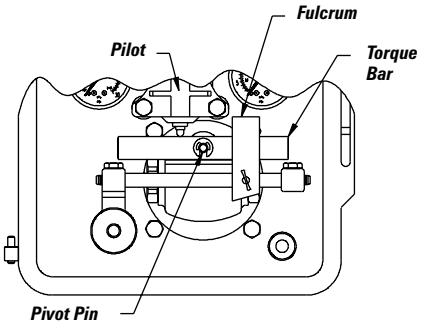

Figure 1 — Direct-Acting Controller

The control can be made *reverse-acting* (rising level decreases pilot output) by moving the fulcrum to the left of the pivot pin as shown in Figure 2.

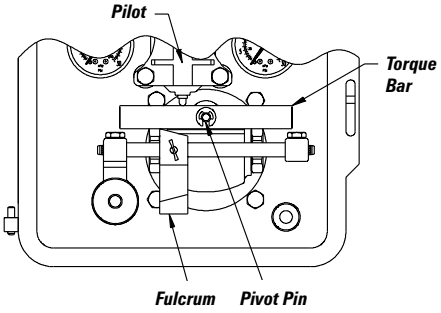

Figure 2 — Reverse-Acting Controller

Dump Span

A snap pilot provides on/off action of output pressure that can be set anywhere within the displacer length. The differential between on and off (dump span) is set by positioning the fulcrum along the torque bar (Figure 3).

Proportional Band

The term *Proportional Band* is most commonly associated with throttling pilots. It is the ratio of used displacer length to total length of the displacer. For example, if 6 in. of level change will develop a 3 to 15 psi output signal with a 12-in. long vertical displacer, the level controller is said to have a 50% proportional band.

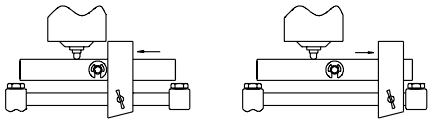

Figure 3 — Adjusting Dump Span and Proportional Band

Level Adjustment

The spring is used to balance the weight of the displacer. As level increases, the apparent weight of the displacer decreases. The spring tension increases and is transmitted to the pilot thrust pin through the lever and fulcrum.

Increasing tension on the spring lowers the sensed level. Decreasing tension on the spring raises the level required to produce the toggle force.

Interface

Spring compression can be sufficiently reduced so that a hydrocarbon liquid can rise above the displacer without transmitting enough force to the pilot to produce an output. If properly adjusted, water (with a higher specific gravity) can then rise on the displacer, changing its weight, and produce an output. This wide range of control makes liquid interface sensing possible.

Pilot Operation

As described in Principle of Operation, force from the balance spring is transmitted via the lever and fulcrum to the thrust pin of the pilot.

Envirosave (Snap) Pilot (Figure 4)

This patented* pilot has two (2) elastomer seats that ensure zero leakage. The upper seat (D) is sealed by a ball (A). The upper seat controls supply air and holds the ball in the closed

*Patent No. 6,497,246 B1

NORRISEAL A DOVER COMPANY
P.O. Box 40525 · Houston, Texas USA 77240-0525
Tel: 713·466·3552 · Fax: 713·896·7386
www.norriseal.com

position. Upward mechanical force on the thrust pin (B) overcomes the supply air pressure holding the ball to the seat. The ball snaps upward and supply air flows out the output port (H). The lower port is sealed by the spherical end of the thrust pin preventing supply air from escaping.

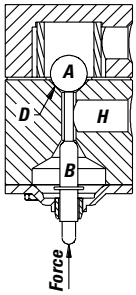

Figure 4 — Snap Pilot

As the upward force on the thrust pin decreases, supply air pressure overcomes the upward force. The ball once again seals the supply air and simultaneously opens the lower exhaust port, venting gas from the control-valve actuator.

Throttle Pilot (Figure 5)

The throttle pilot also has two seats to admit supply gas and exhaust the actuator gas. A diaphragm (E) is used to sense pressure/force feedback and a spring assists closing pressure on the thrust pin. The throttle pilot is operationally similar to the snap pilot, except that the output pressure is proportional to the mechanical force applied to the thrust pin (C). As the thrust pin force changes, the pilot seeks to maintain equilibrium by either decreasing (exhausting) output loading pressure or increasing output loading pressure. Supply air does not flow when the loading pressures of the pilot are balanced.

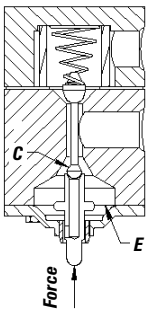

Figure 5 — Throttle Pilot

1.0 LEVEL CONTROLLER INSTALLATION AND START-UP

CAUTION!

When making connection to the vessel, observe all safety requirements of the area where the work is being done. Be especially careful of pressure vessels.

1. After unpacking the controller, visually inspect the unit for any evidence of shipping damage. Shipping damage claims must be filed with the carrier who handled the package(s). Remove any foreign material that may have collected during crating and shipment. Remove the thread protectors from the body end connection.
2. Insure that screwed surfaces on both the controller and the vessel are free of foreign materials.
3. The controller normally ships in four (4) pieces: the controller body/case assembly, the displacer, the displacer arm, and the swivel. Therefore, some assembly is required. Insert the displacer arm into the opening in the controller body. Carefully align and screw the arm into the body shaft. For vertical installation, screw the swivel onto the free end of the displacer arm. Screw the displacer onto the free end of the swivel. For horizontal applications, screw the displacer (no swivel used) directly onto the free end of the displacer arm.
4. Install the controller using good piping practice. Use TFE tape or pipe thread sealant.

CAUTION!

The bodies are rated ANSI 1500 class. Do not install in a system where the working pressures can exceed those marked on the nameplate.

5. Connect instrument air to the supply connection on the controller. Connect the control valve signal line to the output connection. The supply and output connections are clearly marked.
6. Open the case and rock the torque bar by hand to verify the displacer arm moves freely and is NOT resting against the vessel nozzle or other obstruction. The arm must be reasonably centered in the connection opening, parallel to the ground.

NORRISEAL A DOVER COMPANY
P.O. Box 40525 · Houston, Texas USA 77240-0525
Tel: 713·466·3552 · Fax: 713·896·7386
www.norriseal.com

1.1 LEVEL ADJUSTMENT

***NOTE:** All controllers are factory set for average level and sensitivity.*

1. To decrease level (increase compression on the balance spring), turn the adjusting knob on top of the balance spring CLOCKWISE. To increase level (decrease compression on the balance spring), turn the knob on top of the balance spring COUNTER-CLOCKWISE.

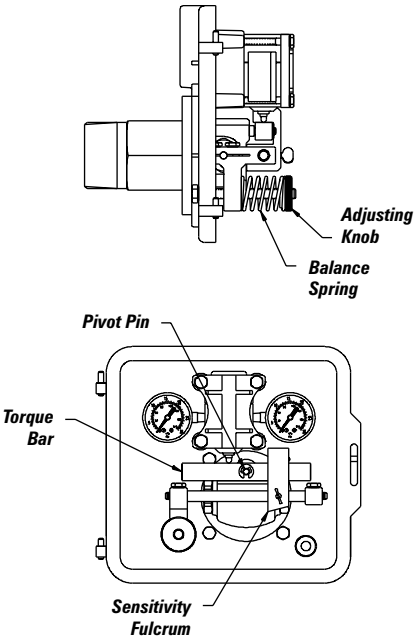

Figure 6 — How to Make Level Adjustments

2. Adjust the proportional band (dump span) by first loosening the thumbscrew on the sensitivity fulcrum. Slide the fulcrum along the fulcrum bar toward the pivot pin to INCREASE proportional band and DECREASE SENSITIVITY. Slide the fulcrum along the fulcrum bar away from the pivot pin to DECREASE proportional band and INCREASE SENSITIVITY. Tighten the thumbscrew on the sensitivity fulcrum when the proper span is selected.

1.2 LIQUID LEVEL INTERFACE

***NOTE:** All controllers are factory set for average level and sensitivity.*

1. Set the sensitivity fulcrum ½-in. from the pivot pin. Reduce the spring tension slowly by turning the adjusting knob COUNTER-CLOCKWISE, and let the UPPER fluid rise to submerge the displacer. Fine tune after the displacer is fully submerged in the UPPER fluid by slowly increasing spring tension (turning adjusting knob CLOCKWISE) until an output signal is obtained. Then back the tension off slowly (turning adjusting knob COUNTER-CLOCKWISE) until the output signal pressure returns to zero.
2. Let the lower fluid rise until the desired interface level is reached. Fine tune by slowly increasing spring tension (turning adjusting knob CLOCKWISE) until an output signal is obtained. Then back the tension off the balance spring slowly (turning adjusting knob COUNTER-CLOCKWISE) until the output signal pressure returns to zero.
3. If a shorter dump span is desired, move the fulcrum farther away from the pivot pin and repeat the above procedure.

2.0 LEVEL CONTROLLER MAINTENANCE

Use only Norriseal replacement parts when servicing level controllers. Please refer to the model and serial numbers when ordering replacement parts.

WARNING!

Before attempting any repairs, isolate the controller from the system and make sure that all pressure is released from the controller body. Shut off and vent supply and output (signal air) lines to the controller.

1. Isolate the controller from the process.
2. Shut off and vent supply and output (signal air) lines to the controller.
3. Release the process pressure.

Controller parts are built to withstand a great deal of wear under normal operating conditions and will rarely need to be repaired. Should repair be necessary, the following sections describe the procedures for disassembling and re-assembling the controller.

2.1 LEVEL CONTROLLER PREVENTIVE MAINTENANCE

1. O-rings and main-shaft bearings last for many years. If a leak occurs, Norriseal has O-ring Seal Kits (LSK) available.
2. Controllers used in high-paraffin service or interface control with a horizontal displacer should be removed and inspected after their initial three (3) months of service.

NORRISEAL A DOVER COMPANY
P.O. Box 40525 · Houston, Texas USA 77240-0525
Tel: 713·466·3552 · Fax: 713·896·7386
www.norriseal.com

Check for debris buildup inside the controller body that might interfere with displacer arm movement. Future inspections can be gauged by how much buildup occurred in the initial three (3) months of service.

2.2 LEVEL CONTROLLER DISASSEMBLY

NOTE: *These instructions do not apply to the pilot or body. See paragraph 2.4 for instructions for removing and/or replacing the pilot. See paragraph 2.6 for removing body.*

1. Remove the balance spring, spring retainer and the spring-adjustment cap screw.
2. Remove the retaining ring from the torque bar. Slide the torque bar off of the pivot pin. Remove and discard Teflon® back-up ring. ***NOTE:*** *DO NOT attempt to remove the pivot pin. It is press-fit into the body and is not meant to be removed.*
3. Remove spring retainer stud.
4. Loosen the two (2) cap screws holding the level-adjusting bar and slide it off the right end of the fulcrum bar and shaft end.
5. Remove the sensitivity fulcrum and fulcrum bar together by pulling the assembly from the level-adjusting bar with spring.
6. Loosen the two (2) cap screws holding the level-adjusting bar with spring and slide it off the left end of the shaft.

2.3 LEVEL CONTROLLER RE-ASSEMBLY

1. Slide the level-adjusting bar with spring onto the left end of the shaft and snug the two (2) cap screws. Do not completely tighten at this time.
2. Install spring retainer stud.
3. Replace the sensitivity fulcrum and fulcrum bar together by pushing the assembly into the level-adjusting bar with spring. Slide the level-adjusting bar onto the right end of the shaft and onto the fulcrum bar. Snug, *but do not tighten*, the two (2) cap screws that secure the bar to the shaft.
4. Center the displacer arm in the body opening. It may be helpful to put a temporary spacer under the displacer arm to hold it in place.
5. Temporarily slide the sensitivity fulcrum fully to the right. Position the fulcrum bar so that it is parallel with the bottom edge of the case. Tighten the two (2) cap screws on the level-adjusting bar with spring and the two (2) cap screws on the level-adjusting bar.
6. Replace the Teflon back-up ring, torque bar and then replace the retaining ring that secures them to the pivot pin. ***NOTE:*** *The torque bar must move freely.*
7. Install the spring adjustment cap screw, balance spring and spring retainer.

2.4 LEVEL PILOT REMOVAL/ REPLACEMENT

WARNING!

Before attempting any repairs, isolate the controller from the system and make sure that all pressure is released from the controller body. Shut-off and vent supply and output (signal air) lines to the controller.

1. The pilot is held in place by four (4) cap screws in the pilot clamp. Remove these four (4) cap screws and lift the pilot from the case.
2. If necessary, replace pilot. Use only genuine Norriseal pilots.
3. Re-install the pilot by reversing instructions 1 through 3 above. It may appear that the pilot gasket does not need replacing, but replacement is recommended.

2.5 LEVEL CONTROLLER PILOT ACTION CONVERSION

EVS Controllers are normally shipped from the factory set for Direct Action. The following procedure converts the unit from Direct to Reverse Action. ***NOTE:*** *When the sensitivity fulcrum is to the right of the pivot pin, the unit is set for Direct Action (figure 1). when the sensitivity fulcrum is to the left of the pivot pin, the unit is set for Reverse Action (Figure 7). It may be*

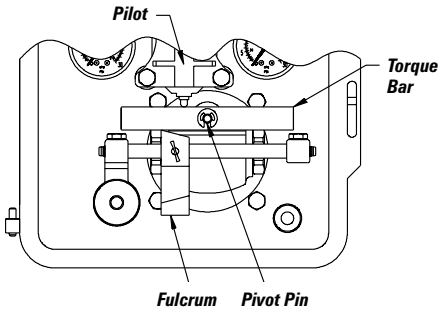

Figure 7 — Reverse-Acting Controller

NORRISEAL A DOVER COMPANY
P.O. Box 40525 · Houston, Texas USA 77240-0525
Tel: 713·466·3552 · Fax: 713·896·7386
www.norriseal.com

necessary to relax the tension from the balance spring to freely move the fulcrum.

1. Remove the thumbscrew from the front of the sensitivity fulcrum.
2. Grasp the top of the sensitivity fulcrum and pull out and downward to completely rotate the fulcrum on the fulcrum bar. Slide the sensitivity fulcrum to the left side of the fulcrum bar and replace the thumbscrew to lock the fulcrum in its new inverted position.
3. If necessary, re-adjust the tension on the balance spring to establish the desired switch point.

2.6 Level Controller Body Disassembly

1. Disassemble the controller by following the disassembly instructions in paragraph 2.2 above.
2. Remove the two (2) bearing blocks (1¼-in. wrench) and the shaft. Remove and discard the O-rings and Teflon back-up rings in the body, on the shaft, and in the bearing blocks.
3. Remove the four (4) cap screws holding the case to the body. The gasket should be discarded. Do not attempt to reuse the gasket.

2.7 Level Controller Body Re-Assembly

1. Install the case/body gasket and mount the case to the Body with four (4) cap screws. Tighten the screws to 6 ft-lbs.
2. Using new O-rings, install the large O-ring over the threads of the bearing block. Install the new Teflon back-up rings in each bearing block, pressing them into place with a 5⁄16-in. diameter rod. Install the new O-rings in each bearing block, pressing them into place with a 5⁄16-in. diameter rod.
3. Replace one (1) bearing block on the either side of the body. ***NOTE:*** *Light oil applied to the O-rings will assist in the assembly.*
4. Insert the shaft into the body and firmly seat in the bearing.
5. Replace the remaining bearing block on the body and tighten.
6. Reassemble the controller per paragraph 2.3.

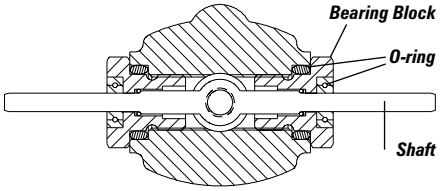

Figure 8 — End-on Cutaway of Controller Body

3.0 Repair Kits

Norriseal provides repair kits for use in controller maintenance. Contact your Norriseal sales office or your sales representative for more information.

CAUTION!

If the bearing blocks are removed from the body for any reason, the back-up rings and O-rings must be re-packed (pressed into place). It is recommended that new back-up rings and new O-rings be used.

P.O. Box 40525 · Houston, Texas USA 77240-0525
Tel: 713·466·3552 · Fax: 713·896·7386
www.norriseal.com

TABLE 1 — TROUBLE DIAGNOSIS

TROUBLE	SYMPTOM PROBABLE CAUSE	CORRECTIVE ACTION
Pilot output pressure gauge indicates output pressure signal when fluid level is below displacer on a direct-acting controller ***OR*** when fluid level is above displacer on a reverse-acting controller.	1. Balance spring is too compressed and puts too much pressure on the torque bar.	1. Back-off the spring retainer until the output pressure signal goes off. Re-check when the fluid level rises (direct-acting) or falls (reverse-acting).
	2. The displacer arm is set too low or the displacer is hitting something inside the vessel.	2. Check the displacer arm by moving the leveling adjusting bar up and down. If the adjusting bar will move in only one direction, this indicates the displacer arm is riding at either the top or bottom of the vessel connection. If it moves too freely, the displacer has become disconnected from the displacer arm. Re-center the displacer arm in the vessel connection.
Pilot output pressure gauge indicates no output pressure signal when fluid level is above displacer on a direct-acting controller ***OR*** when fluid level is below displacer on a reverse-acting controller.	1. Balance spring is insufficiently compressed and doesn't put enough pressure on the torque bar.	1. Compress the spring retainer until an output pressure signal is indicated on the output pressure gauge. Re-check when the fluid level falls (direct-acting) or rises (reverse-acting).
	2. The displacer arm is set too high or the displacer is hitting something inside the vessel.	2. Check the displacer arm by moving the leveling adjusting bar up and down. If the adjusting bar will move in only one direction, this indicates the displacer arm is riding at either the top or bottom of the vessel connection. If it moves too freely, the displacer has become disconnected from the displacer arm. Re-center the displacer arm in the vessel connection.
Controller does not repeat at the same fluid level after each dump and sometimes fails to either dump or shut-off. (The torque bar does not bounce back fast when depressed and appears to be hard to move.)	Paraffin or debris has built up inside the level control body.	Remove controller from service and clean out the body with a solvent.
A pneumatic pilot bleeds air continuously.	Foreign matter under the ball on a snap control pilot or under the peanut on a throttle control pilot. ***OR*** The tru-arc ring on the snap pilot thrust pin may have been dislocated.	Remove the pilot following the instructions in paragraph 2.4. Remove the two cap screws from the bottom of the pilot. Clean the pilot thoroughly. If a snap pilot, make sure the dimension between the tru-arc ring and the bottom of the pin is ¾ in. If not, gently tap the tru-arc ring into the proper location. Reassemble the pilot.
On interface control, the vessel occasionally loses all fluid or the vessel overflows, especially with temperature change. The displacer arm is free and the displacer is not hitting inside the vessel.	The displacer is not big enough to handle the interface differential. Close specific gravity of two fluids and a temperature change can cause this problem.	Provide exact specific or API gravities of both fluids to Norriseal Engineering for exact sizing of the displacer that should be used.

P.O. Box 40525 · Houston, Texas USA 77240-0525
Tel: 713·466·3552 · Fax: 713·896·7386
www.norriseal.com

HEADQUARTERS, MANUFACTURING PLANT AND SALES

P.O. Box 40525 • Houston, Texas USA 77240-0525
11122 West Little York • Houston, Texas USA 77041-5016
Tel: 713·466·3552 • Fax: 713·896·7386
www.norriseal.com

Due to the continuous improvement at Norriseal, specifications and/or prices are subject to change without notice or obligation.

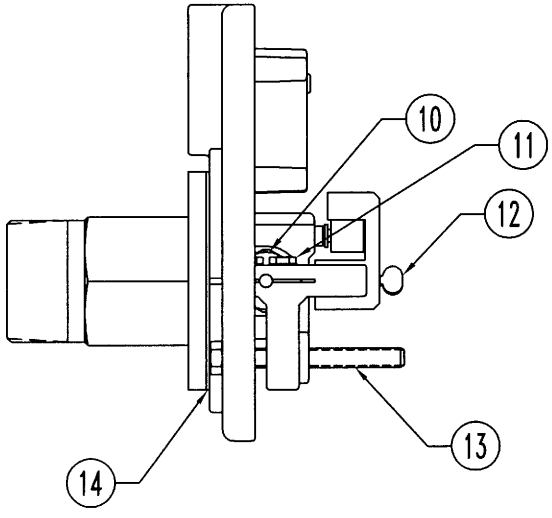

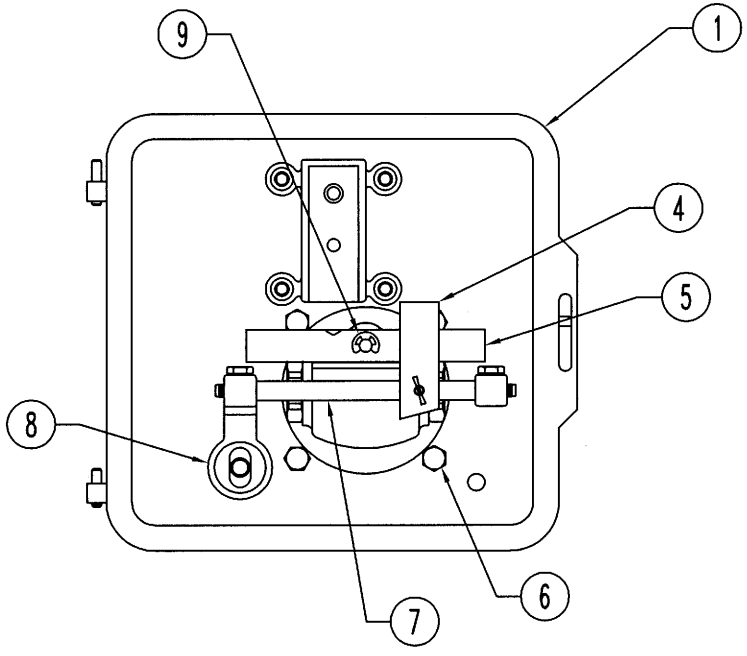

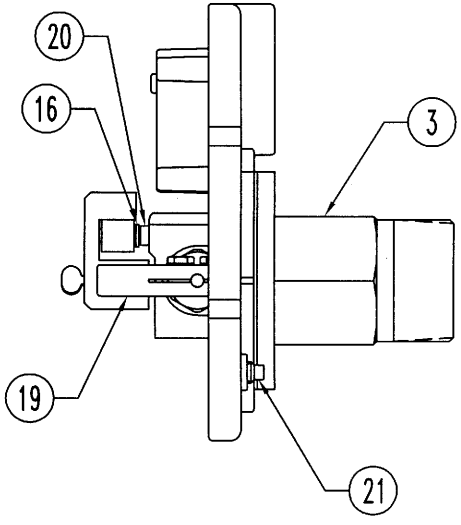

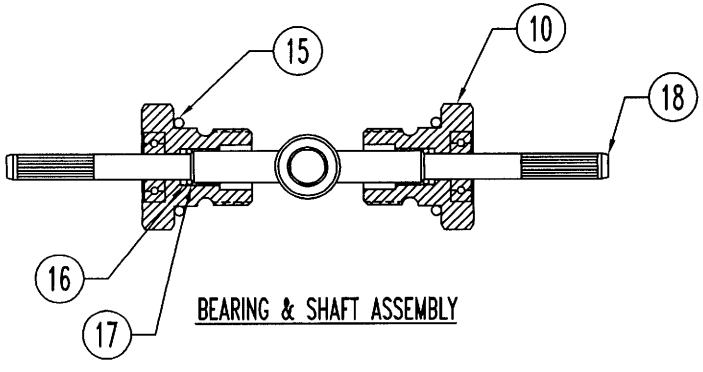

BEARING & SHAFT ASSEMBLY

2 22 23 — NOT SHOWN

SERIES EVS LIQUID LEVEL CONTROLLER

(EXCLUDING PILOT AND GAUGES)

SHEET 1 OF 2

DRAWN BY	DATE	DCN RELEASE NO.	DRAWING NO.
GSG	10-13-03	13345	EVS-0014

NORRISEAL

ITEM	DESCRIPTION	MATERIAL	STOCK NUMBER	QTY.
1	CASE CASTING LLC EVS	ALUMINUM	626516-EVS-0003	1
2	COVER CASTING EVS	ALUMINUM	626515-EVS-0002	1
3	BODY 2.00 EVS ANSI 1500	LCC	626514-EVS-0001	1
4	FULCRUM SENSITIVITY F/EVS	NYLON	626520-EVS-0007	1
5	BAR TORQUE F/EVS	ALUMINUM	428747-EVS-0012	1
6	SCREW CAP HEX .250-28UNF X .75 LG	18-8 SST	416167	4
7	BAR FULCRUM F/EVS	316 SST	428671-EVS-0011	1
8	RAW CASTING BAR ADJUSTING LEVEL F/SPRING	ALUMINUM	626517-EVS-0004	1
9	RING RETAINING	316 SST	626522	1
10	BLOCK BEARING W/SST BEARING	316 SST	418447-1001-694	2
11	SCREW CAP HEX .250-28UNF X .63 LG	18-8 SST	415870	4
12	SCREW THUMB 10-32UNC X .50 LG	18-8 SST	415222-1001-1316	1
13	SCREW CAP HEX ALL THREAD .375-24UNC X 3.50 LG	18-8 SST	626525	1
14	GASKET CASE/BODY F/EVS	NEOPRENE	626521-EVS-0009	1
15	O RING	VITON A	416013-210	2
16	RING BACKUP SPIRAL	TFE	415029	3
17	O RING	VITON GF	626281-010	2
18	SHAFT F/EVS	316 SST	626519-EVS-0006	1
19	RAW CASTING BAR ADJUCTING LEVEL F/EVS	ALUMINUM	626518-EVS-0005	1
20	POST PIVOT .250 X 1.62 LG F/EVS	316 SST	428670-EVS-0008	1
21	PLUG BREATHER .125NPT SQUARE HEAD	POLYETHYLENE	426111-1005-199	1
22	NAMEPLATE INSTRUCTION F/EVS	316 SST	626583-EVS-0013	1
23	GASKET PILOT/CASE F/EVS	VITON GF	626524-EVS-0010	1

SERIES EVS LIQUID LEVEL CONTROLLER

(EXCLUDING PILOT AND GAUGES)

SHEET 2 OF 2

DRAWN BY	DATE	DCN RELEASE NO.	DRAWING NO.
GSG	10-13-03	13345	EVS-0014

NORRISEAL

Installation & Maintenance Instructions MM-200(D)

McDonnell & Miller

ITT Industries

Series 64 Low Water Cut-Off

FM APPROVED

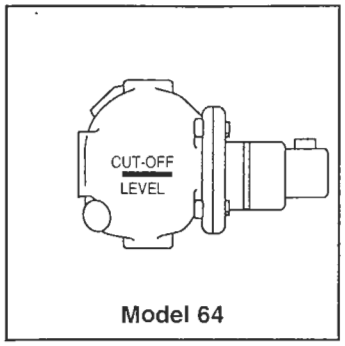

Model 64

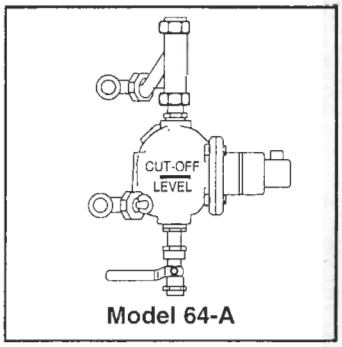

Model 64-A

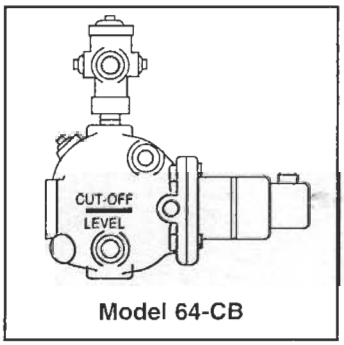

Model 64-CB

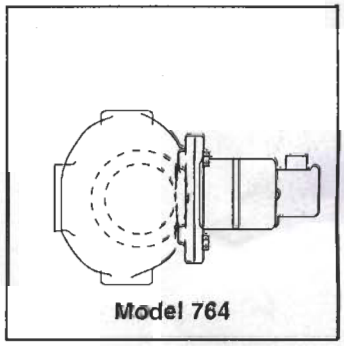
Model 764

Typical Applications:

- Primary or secondary low water cut-off for hot water and steam boilers.
- Low water cut-off
- High water cut-off
- Alarm actuator

OPERATION

Maximum Boiler Pressure: 50 psi (3.5 kg/cm^2)

Electrical Ratings

Voltage	Motor Switch Rating (Amperes)		Pilot Duty
	Full Load	Locked Rotor	
120 VAC	7.2	43.2	120 VA at 120 or 240 VAC
240 VAC	3.6	21.6	

NOTE: 11MV is rated 24VA @ 24VAC to 120VAC.

⚠ WARNING

- Before using this product read and understand instructions.
- Save these instructions for future reference.
- All work must be performed by qualified personnel trained in the proper application, installation, and maintenance of plumbing, steam, and electrical equipment and/or systems in accordance with all applicable codes and ordinances.
- To prevent serious burns, the boiler must be cooled to 80°F (27°C) and the pressure must be 0 psi (0 bar) before servicing.
- To prevent electrical shock, turn off the electrical power before making electrical connections.
- This low water cut-off must be installed in series with all other limit and operating controls installed on the boiler. After installation, check for proper operation of all of the limit and operating controls, before leaving the site.
- We recommend that secondary (redundant) Low Water Cut-Off controls be installed on all steam boilers with heat input greater than 400,000 BTU/hour or operating above 15 psi of steam pressure. At least two controls should be connected in series with the burner control circuit to provide safety redundancy protection should the boiler experience a low water condition. Moreover, at each annual outage, the low water cut-offs should be dismantled, inspected, cleaned, and checked for proper calibration and performance.
- To prevent serious personal injury from steam blow down, connect a drain pipe to the control opening to avoid exposure to steam discharge.
- To prevent a fire, do not use this low water cut-off to switch currents over 7.4A, 1/3 Hp at 120 VAC or 3.7A, 1/3 Hp at 240 VAC, unless a starter or relay is used in conjunction with it.

Failure to follow this warning could cause property damage, personal injury or death.

INSTALLATION –

Model 64 – For Steam Boilers with 1" (25mm) Equalizing Lines

TOOLS NEEDED:
One (1) flathead screwdriver and two (2) pipe wrenches.

STEP 1 - Determine the Location of the Low Water Cut-Off

a. Whether the gauge glass is mounted directly into the boiler or on an independent water column, the cut-off line on the 64 body casting should be mounted 1/2" (15mm) above the lowest visible point of the gauge glass.

STEP 2 - Installation of the Model 64

a. Locate the gauge glass and determine the level that the 64 has to be mounted at in order to achieve the criteria in Step 1.

b. Pipe the 64 following the diagrams shown to the right. Follow the diagram that represents your boiler.

c. Crosses should be used at each right angle connection for inspection and cleaning.

d. Make sure the blow-down valves are full port.

Gauge Glass Mounted Directly into Boiler

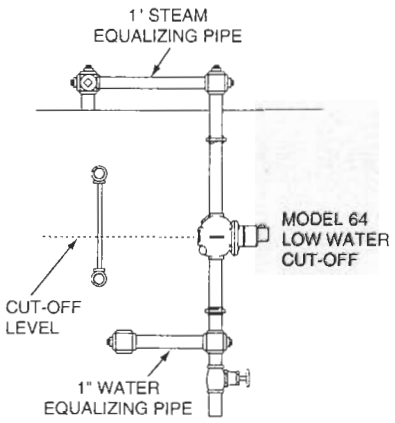

For Boilers with Independent Water Columns

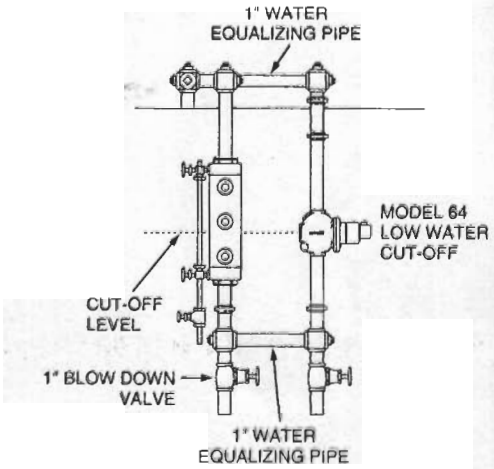

Test the Model 64 Before Leaving the Site
Open the blow-down valve, causing the water level to drop in the float chamber while burner is operating. As the float drops the alarm circuit (if used) closes first; then on further drop the cut-off circuit will open, shutting the burner off.

IMPORTANT: Instruct boiler attendant to blow down the float chamber at least once a week during the heating season, if operating pressure is below 15 psi (1 kg/cm²). If above 15 psi blow down once a day.

NOTE: On new boiler installations, leaky systems, or where the quality of the water is poor, blow down the control more frequently.

⚠ CAUTION

Protect yourself when blowing down controls, hot water and steam will flow out of the drain pipe attached to the blow-down valve. Failure to follow this caution may result in serious burns.

INSTALLATION –

Model 64 – For Hot Water Boilers with 1" (25mm) Equalizing Lines

TOOLS NEEDED:
One (1) flathead screwdriver and two (2) pipe wrenches.

STEP 1 - Determine the Location of the Low Water Cut-Off

a. The line on the casting of the model 64 must be installed above the lowest permissible water level determined by the boiler manufacturer.

STEP 2 - Installation of the Model 64

For float type controls it is recommended that Test-N-Check® (TC-4) valves be used in the upper and lower equalizing lines. They offer a functional means for testing the 64 control, and conform to the ASME CSD-1 code.

a. Study the figures to the right and determine which figure shows how the 64 control will be attached to the boiler.

Figure 1. Connect the upper equalizing pipe to the riser going to the radiation or to the compression tank. Connect the lower equalizing pipe to any available opening in the side of the boiler. **NOTE:** If no opening is available in the side of the boiler, connect the lower equalizing pipe into the drain connection.

Figure 2. If there is a tapping available on the top of the boiler connect the upper equalizing pipe to it. **NOTE:** During initial filling or after blow down the upper equalizing pipe and possibly the 64 control will have an air pocket. Connect a vent or bleed valve on the top of the vertical equalizing pipe. If the Test-N-Check (TC-4) valve is used the vacuum breaker can be used to bleed the air pocket.
CAUTION: When bleeding an air pocket manually, protect yourself from being burned with hot water.

Figure 3. If there is no tapping available on the boiler, connect both the upper and lower equalizing pipe into the vertical riser going to the radiation or to the compression tank. **IMPORTANT:** The horizontal equalizing pipe should not be above the horizontal run going to the radiation. If it is, an air pocket will be created and a vent or bleed will have to be installed.

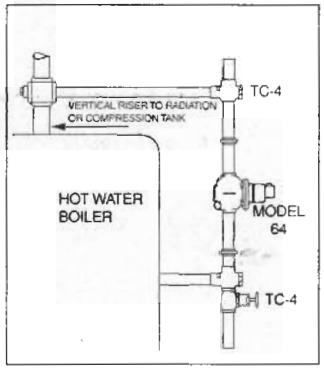

Figure 1

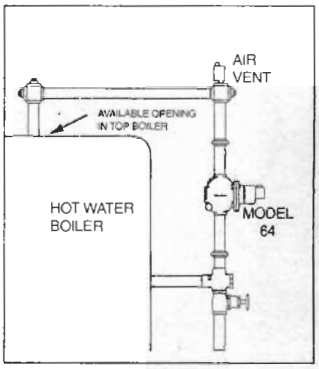

Figure 2

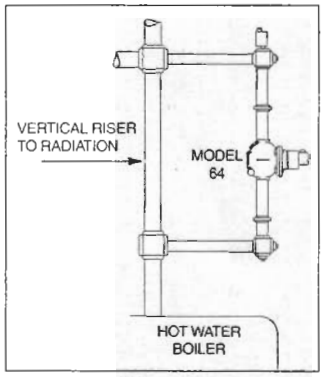

Figure 3

Test the Model 64 Before Leaving the Site
While the burner is operating open the blow-down valve, causing the water level to drop in the float chamber. As the float drops the alarm circuit (if used) closes first; then on further drop the cut-off circuit will open, shutting the burner off. **NOTE:** If no Test-N-Checks (TC-4) valves were used, do this test before filling the system completely.

IMPORTANT: Instruct boiler attendant to blow down the float chamber at least once a week during the heating season, if operating pressure is below 15 psi (1 kg/cm²). If above 15 psi blow down once a day.

NOTE: On a new boiler installation, leaky system, or where the quality of the water is poor, blow down the control more frequently.

⚠ CAUTION

Protect yourself when blowing down controls, hot water will flow out of the drain pipe attached to the blow-down valve. Failure to follow this caution may result in serious burns.

INSTALLATION –

Model 764 – For Steam or Hot Water Boilers

TOOLS NEEDED:
One (1) flathead screwdriver and two (2) pipe wrenches.

STEP 1 - For Steam or Hot Water Boilers where 2 1/2" (65mm) Tapping is Provided

a. See figure 1. The 2 1/2" (65mm) tapping on the boiler has to be above the minimum safe operating level, as determined by the boiler manufacturer. On steam boilers, make sure the line on the casting is above the lower gauge glass nut. **NOTE:** Do **not** reduce the 2 1/2" (65mm) tapping, as this would compromise low water protection.

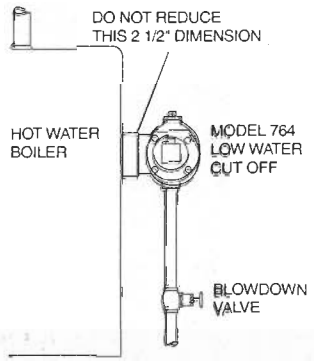

Figure 1

STEP 2 - For Hot Water Boilers where 2 1/2" (65mm) Tapping is not Provided

a. See figure 2. If there are no 2 1/2" (65mm) tappings on a hot water boiler, the 764 control can be mounted on a 2 1/2" (65mm) tee on the riser going to the radiation or compression tank. **NOTE:** Do **not** reduce the 2 1/2" (65mm) tapping, as this would compromise low water protection.

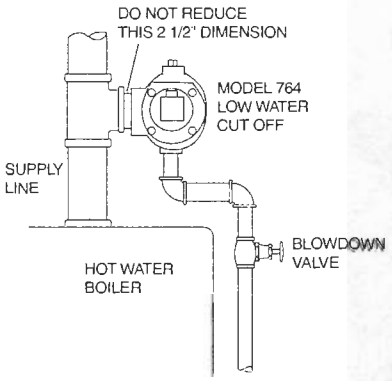

Figure 2

Test the Model 764 Before Leaving the Site
While the burner is operating open the blow-down valve, causing the water level to drop in the float chamber. As the float drops the alarm circuit (if used) closes first; then on further drop the cut-off circuit will open, shutting the burner off. **NOTE:** If no Test-N-Checks (TC-4) valves were used, do this test before filling the system completely.

IMPORTANT: Instruct boiler attendant to blow down the float chamber at least once a week during the heating season, if operating pressure is below 15 psi (1 kg/cm^2). If above 15 psi blow down once a day.

NOTE: On a new boiler installation, leaky system, or where the quality of the water is poor, blow down the control more frequently.

⚠ CAUTION

Protect yourself when blowing down controls, hot water will flow out of the drain pipe attached to the blow-down valve. Failure to follow this caution may result in serious burns.

INSTALLATION –

Model 64-A – For Steam Boilers Using Quick Hook-up Fittings

TOOLS NEEDED:
One (1) flathead screwdriver, two (2) pipe wrenches, and an adjustable wrench.

STEP 1 - Preparing the Boiler

a. Remove gauge glass and its trim from the boiler.

STEP 2 - Installation of the Model 64-A

a. See figures 1 and 2. Install both brass Y fittings (A) into the boiler gauge glass tappings. **NOTE:** If gauge glass tappings are spaced more than 10 1/8" (270mm) apart, invert the Black Y (B). See figure 2. If spaced greater than 13 3/8" (339mm), substitute a longer 1/2" (15mm) nipple for original (C).

b. See figure 3. Install reducing bushing (D) and nipple (C) into top 1" (25mm) NPT tapping (E). Install reducing bushing (F), nipple (G), and blow down valve (H) into 1" (25mm) NPT (J).

c. See figure 3. Slip union nut (K) over lower tail piece (L) and screw it into either 1/2" (15mm) tapping (M) or (N). Use the 1/2" (15mm) pipe plug to close unused tapping. Slip union nut (O) over union piece (P) and nipple (R) and install into black Y (B). Slide black Y (B) over nipple (C). Connect upper (O) and lower (K) unions to brass Y fitting (A, figure 1) and tighten. **NOTE:** the black Y (B) will have to be moved up or down to mate the union halves. Tighten compression nut (S).

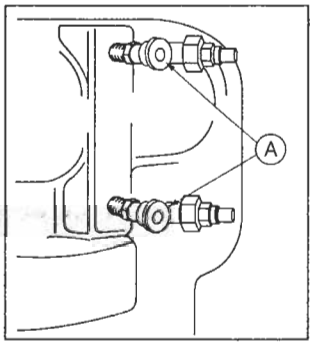

Figure 1

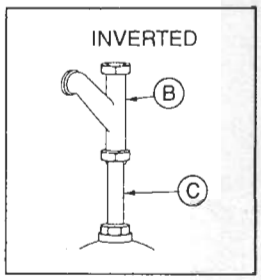

Figure 2

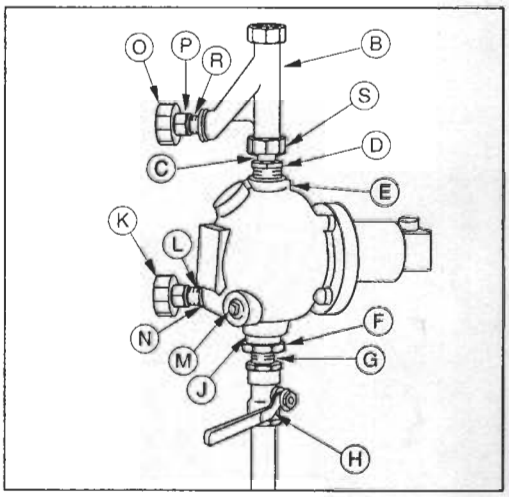

Figure 3

Test the Model 64-A Before Leaving the Site
While the burner is operating open the blow-down valve, causing the water level to drop in the float chamber. As the float drops the alarm circuit (if used) closes first; then on further drop the cut-off circuit will open, shutting the burner off. **NOTE:** If no Test-N-Checks (TC-4) valves were used, do this test before filling the system completely.

IMPORTANT: Instruct boiler attendant to blow down the float chamber at least once a week during the heating season, if operating pressure is below 15 psi (1 kg/cm²). If above 15 psi blow down once a day.

NOTE: On a new boiler installation, leaky system, or where the quality of the water is poor, blow down the control more frequently.

⚠ CAUTION

Protect yourself when blowing down controls, hot water will flow out of the drain pipe attached to the blow-down valve. Failure to follow this caution may result in serious burns.

Wiring Instructions

⚠ WARNING

- **To prevent electrical shock, turn off the electrical power before making electrical connections.**
- **This low water cut-off must be installed in series with all other limit and operating controls installed on the boiler. After installation, check for proper operation of all of the limit and operating controls, before leaving the site.**

Failure to follow this warning could cause electrical shock, an explosion and/or a fire, which could result in property damage, personal injury or death.

Using a flathead screwdriver, remove the one (1) screw that secures the switch cover.

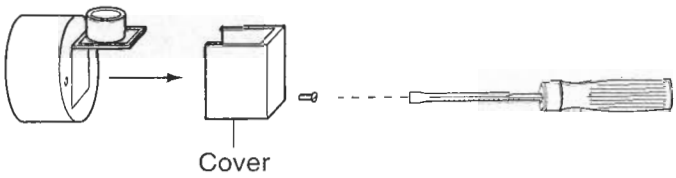

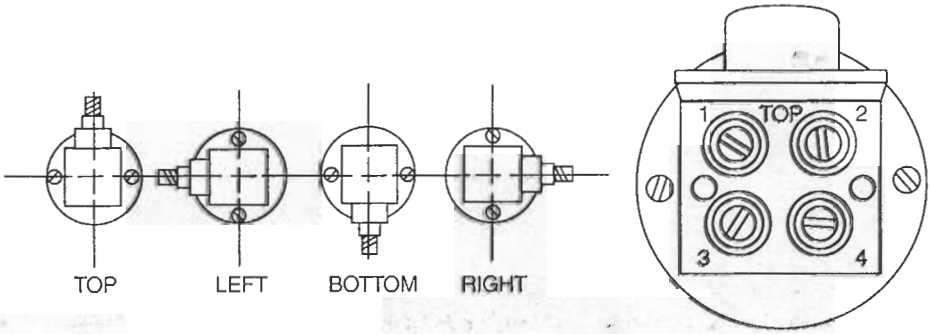

Electrical connector is movable into any one of four positions illustrated, by simply removing two black headed screws and rotating housing.

NOTE: This control should be wired with materials suitable for use at 75°C.

Switch Operation

The No. 11 switch can be identified by a black terminal panel. The switch contains two (2) single pole single throw switches to control the water feeder and the low water cut-off. The low water cut-off switch is between terminals marked "1" and "2". A second switch is located between terminals marked "3" and "4". This can be used to operate a low water alarm or a McDonnell & Miller electric water feeder.

NOTE: Connect hot wire to terminal marked (2) ahead of all controls. See diagram 1 on the following page (page 7) for control operation. See diagrams 2-4 on the following page (page 7) for proper application wiring.

Diagram 1

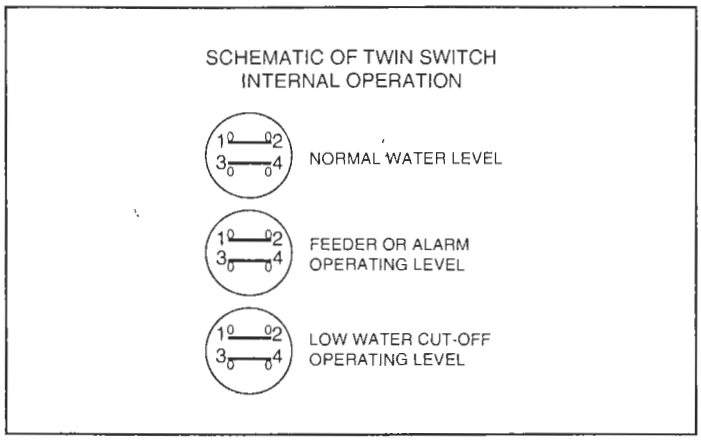

Diagram 2

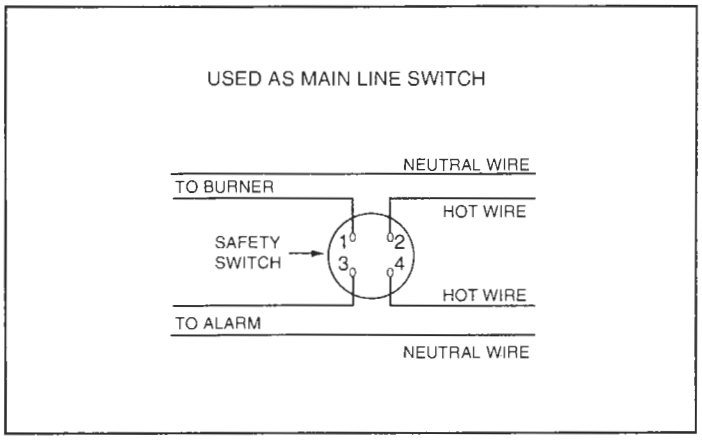

Diagram 3

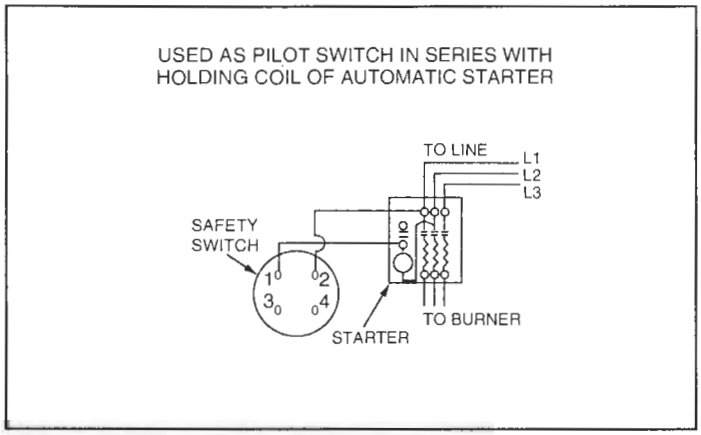

Diagram 4

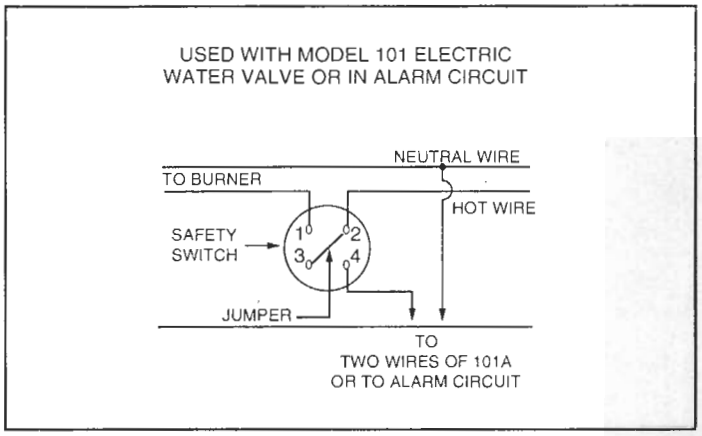

IMPORTANT: Low water cut-off circuit of the 64 series must be electrically wired in series with all other boiler limit operating controls.

Model 64A-M For use on 24 or 120 VAC systems requiring manual reset on low water cut-off.

⚠ CAUTION

Do not electrically connect water feeder to Model 64A-M. This model includes a manual reset feature, failure to follow this caution could result in boiler flooding and property damage.

WIRING SCHEMATIC

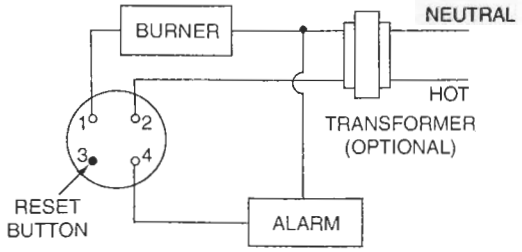

SWITCH SCHEMATIC

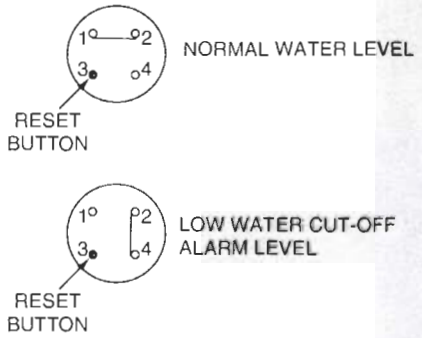

Place the cover on the switch housing and, using a flathead screwdriver, tighten the one (1) screw to approximately 2 ft•lb (2.6 N•m).

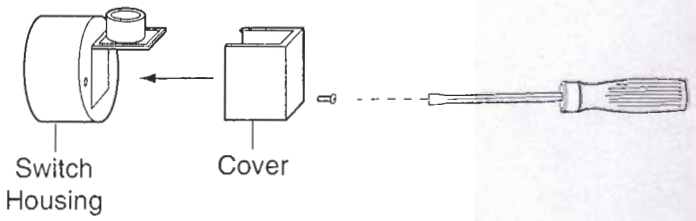

MAINTENANCE

SCHEDULE:

- **Blow down weekly during heating season.**
- **Open up float chamber and clean annually.** More frequent cleaning may be necessary if there are high make-up water requirements or poor local water quality.
- **Replace control every 10 years.**

TROUBLESHOOTING

Problem:

1. Burner does not shut off on low water.

a. **Cause:** Float chamber is loaded with mud or sediment.

Test: With water level below the control check if terminals 1 and 2 are open. If not, remove switch and manually test if terminals 1 and 2 can be opened.

Solution: Open float chamber and clean. At this time, check for a build-up of scale or sediment between corrugations of the bellows.

b. **Cause:** Contacts are fused together.

Test: Remove switch and operate manually to verify proper switch operation.

Solution: Replace switch. Check electrical load and make sure it is within the ratings of the switch.

2. Electric water feeder does not shut off.

a. **Cause:** Build-up of scale or sediment between corrugations of the bellows.

Test: With water level above the control, check if terminals 3 and 4 are open. If not, remove switch and manually test to verify terminals 3 and 4 can be opened.

Solution: Open float chamber and replace or clean the bellows.

b. **Cause:** Contacts are fused together.

Test: Remove switch and operate manually to verify proper switch operation.

Solution: Replace switch. Check electrical load and make sure it is within the ratings of the switch.

McDonnell & Miller

ITT Industries
Engineered for life

3500 N. Spaulding Avenue
Chicago, Illinois 60618
tel: 773 267-1600
fax: 773 267-0991
www.mcdonnellmiller.com

Printed in U.S.A. 2-04 245632

HANG THIS CARD AS CLOSE AS POSSIBLE TO THE CONTROL

Give to BOILER OWNER

IMPORTANT

Be sure to flush your boiler water level control weekly while boiler is in operation. Failure to follow this procedure can cause the control to malfunction resulting in serious boiler damage.

Series 247 51 51-S 53

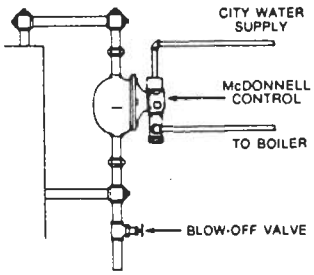

Series 61 63 64

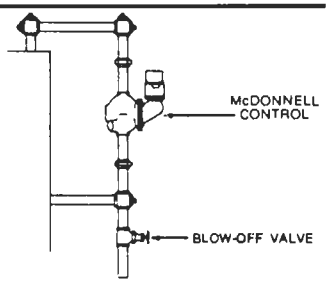

CAUTION: When flushing control, hot water and steam will flow out the drain pipe. Control must be flushed at least once a week while boiler is in operation. Opening blow-off valve also checks the cutoff operation (if control is equipped with a cutoff switch). While burner is on, open blow-off valve. Float should drop and you will hear control feed water to boiler on those controls equipped with a feeder. Burner should stop. Hot water and steam will flow out the drain pipe flushing away sediment.

CAUTION: If burner does not shut off during blow down replace control immediately. Continue draining water from control until water is clean. Close valve. Restore boiler water level, if necessary

SPECIAL FLUSHING INSTRUCTIONS — New boiler Installed in Old System — Installation of new boiler may break loose a heavy accumulation of sediment and scale from old piping and radiators. It is extremely important to flush your McDonnell control more frequently. **First week: 2 or 3 times. Thereafter: at least once a week.**

McDonnell & Miller

Chicago, IL U.S.A.

FORM NO. 245445 PRINTED IN U.S.A. 11/91

McDONNELL & MILLER

Bulletin SL-93-7B

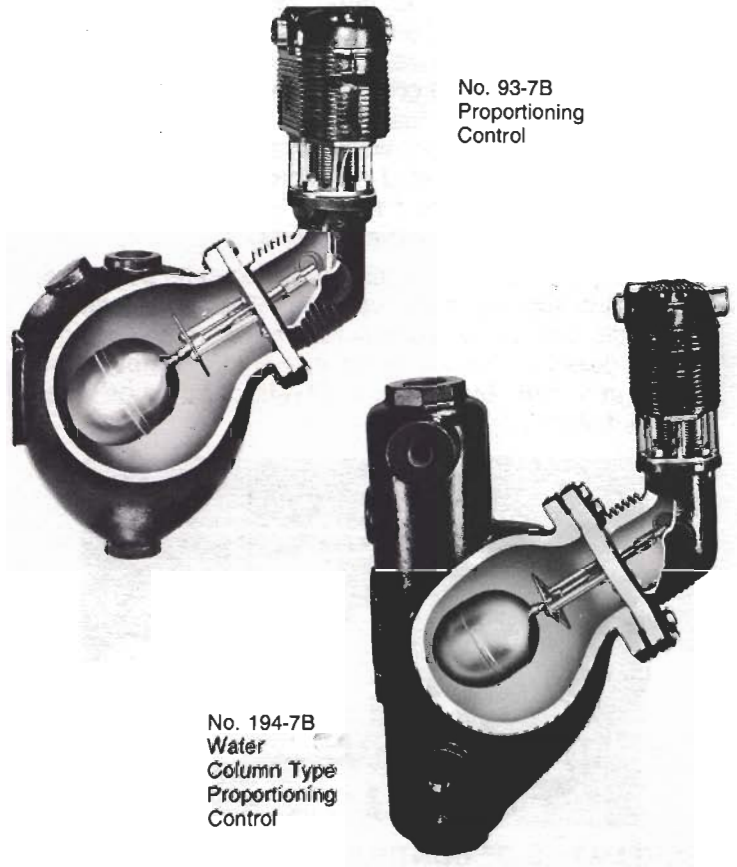

McDONNELL
93-7B and 94-7B Series Electric Proportioning Controls

FOR MODULATED CONTROL OF WATER LEVEL IN BOILERS AND TANKS

On some boiler and tank installations it is desirable to modulate the flow of feedwater into the vessel in direct proportion to its load. This is true particularly on boiler applications with a variable steam load.

A modulating or proportioning system will maintain a continuous boiler water feed proportionate to the load, to provide a more constant water line. This reduces the possibility of cold water suddenly entering the boiler in large amounts and causing an erratic water line when the load increases.

On certain boiler applications a system of this type, utilizing the McDonnell Electric Proportioning Control, provides the owner or operator with certain advantages:

- A constant water line for operating efficiency and economy.
- Electric control system operation with or without the presence of steam.
- Installation of control valves at any location, as there is no mechanical linkage to the control.
- Continuous boiler feed pump operation so that pump may be sized closer to the maximum boiler load.

IMPORTANT:

Please read all instructions carefully before starting work. Installation must be performed by qualified personnel only, in accordance with all applicable codes and ordinances. Test operation of all controls before placing in service.

Schematic diagram of a modulated feed water system, which utilizes a McDonnell Electric Proportioning Control with a proportioning type of motor operated valve. (Valve furnished by others.)

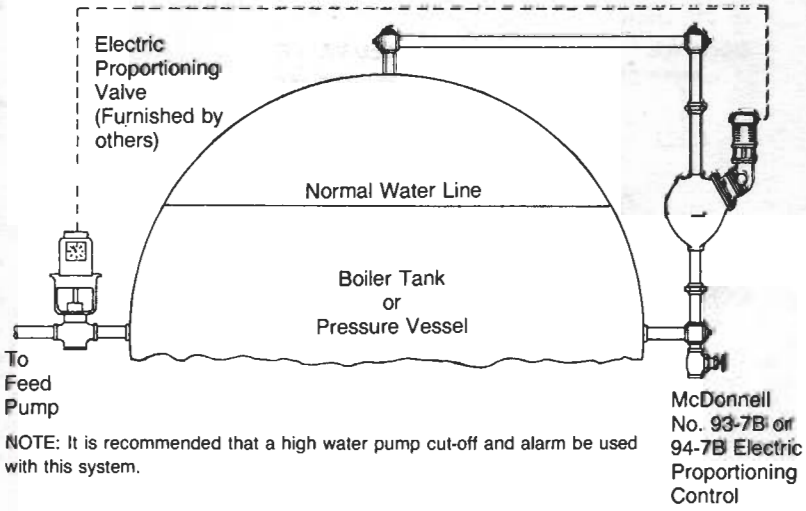

NOTE: It is recommended that a high water pump cut-off and alarm be used with this system.

ITT McDonnell & Miller
ITT Fluid Technology Corporation

McDONNELL Electric Proportioning Controls

The proportioning action of the control is obtained by use of a potentiometer slide wire illustrated below. This potentiometer slide wire is actuated by the float operated mechanism of the McDonnell 93 or 94 Series Controls. As the steam load varies, the water level in the boiler rises or falls. This rise or fall is reproduced in the float bowl of the control. Thus the float mechanism follows the changes in the boiler water level, actuating the 135 Ohm potentiometer located in the proportioning regulator. This in turn is connected to a similar 135 Ohm potentiometer in an electric valve operator.

In addition to the proportioning potentiometer slide wire, the control also has a low water cut-off and alarm switch to handle emergency conditions. Therefore, this control is also designed for use as the primary low water cut-off of the automatic burner, in the event of pump or water supply failure.

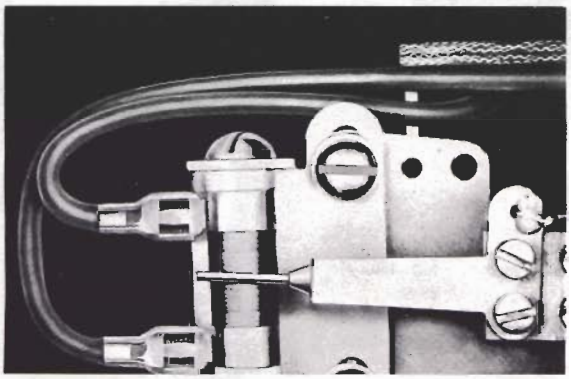

Operating Range of McDonnell Control

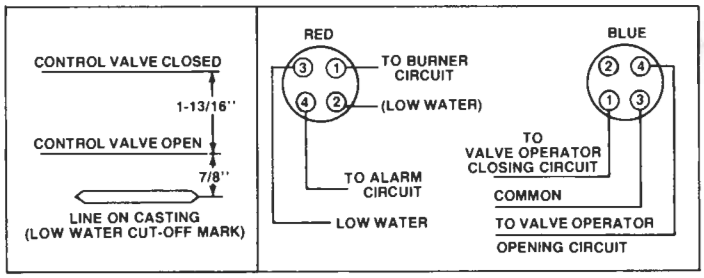

ELECTRICAL RATINGS

Potentiometer Slide Wire:
135 ohms—24 V.A.C.
Pilot Duty Cut-Off & Alarm Circuits:
120-240 V.A.C.
345 V.A.
USE COPPER WIRE ONLY

SCHEMATICS OF CONTROL AND VALVE OPERATION

The function of the McDonnell Electric Proportioning Control is to actuate the motor operated valve, so that the amount of make-up through the valve is in proportion to the boiler demand at that particular time. Therefore the motor operated valve will open, close, or hold in a fixed position depending upon the immediate requirement of the boiler.

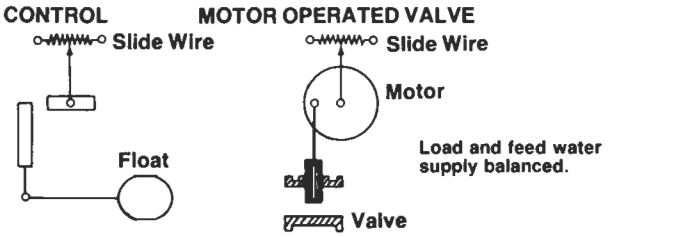

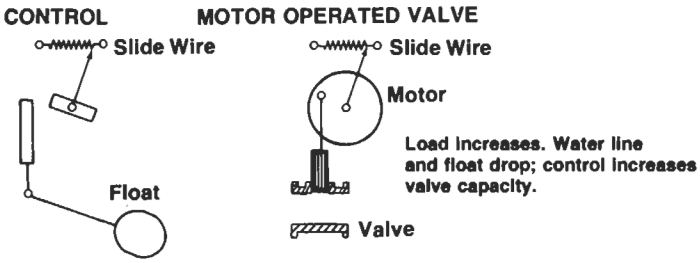

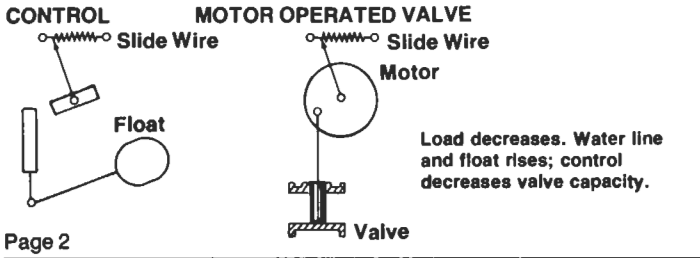

GENERAL DESIGN SUGGESTIONS FOR PROPORTIONING FEED VALVE SYSTEM

- The timing on the proportioning valve motor should be approximately 30 seconds for most applications.
- Do not oversize the valve. If there is an equal choice between two valve sizes, select the smaller.
- For best proportioning valve characteristics, design for a 20 psi pressure drop across the valve, and then select proper discharge pressure for the feed water pump.
- The static pressure rating of the valve must be equal to, or greater than, the maximum pump discharge pressure.
- On multiple boiler installations, it is recommended that a balancing valve be placed in each boiler feed line for on-the-job balancing. Also where one or more boilers may be taken off the line with no pressure, the boiler feed line should be closed manually.
- An auxiliary end switch on the valve motor is recommended to shut off the feed pump when the valve reaches a closed position.
- A high water pump cut-off control should be installed several inches above the normal water level to stop the pump and prevent over-filling.
- Contact valve manufacturer for more specific valve information.
- It is recommended that provision be made in the piping for by-passing part of the pump discharge during periods of low or no make-up feed to the boiler.

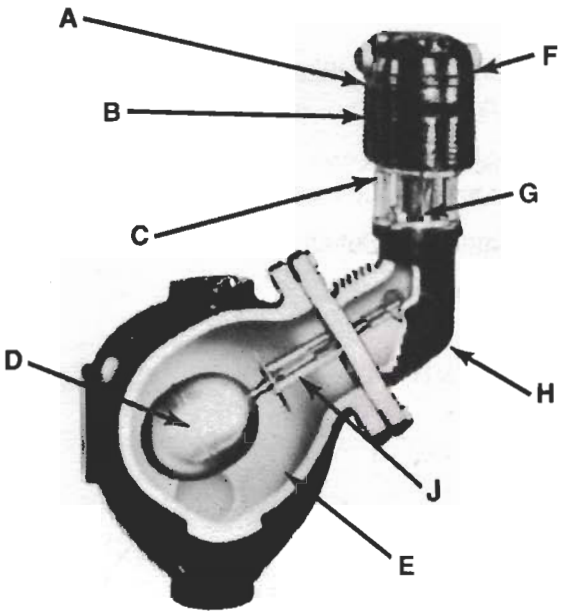

A. Repulsion Magnetic Operation—For positive response to float action.

B. Potentiometer and Switches Sealed Off—No openings of any kind from float chamber to upper housing.

C. Uniform Operating Levels—Unaffected by pressure variations.

D. High Tensile Strength Alloy Float—Tested to withstand pressures in excess of control rating.

E. Ample Float Clearence—Steep slope of casting, plus generous clearences throughout, minimizes possibilities of sediment interfering with float action.

F. Tamper-Resistant—Cap lifts off for easy terminal connections without exposing switching mechanism.

G. Heat Dissipation—Generous use of fins, plus long neck design, dissipates heat.

H. Teflon Sleeve—Used at float arm coupling. Resists adherence of foreign materials, and is unaffected by operating temperatures.

J. Hinged Float Support—Flat springs of high tensile, corrosion resistant, hydrogen age-hardened "K" Monel provide flexible, practically frictionless fulcrum for float arm.

FOR PRESSURES UP TO 150 PSI

McDONNELL No. 93-7B PROPORTIONING CONTROL

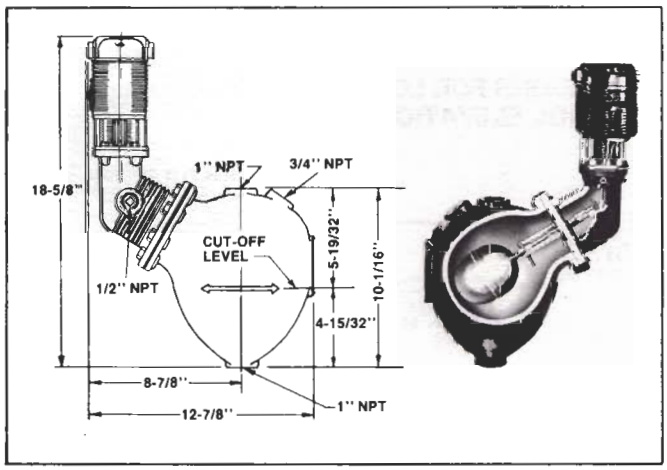

McDONNELL No. 193-7B PROPORTIONING CONTROL

Water column type body has tappings for steam trim.

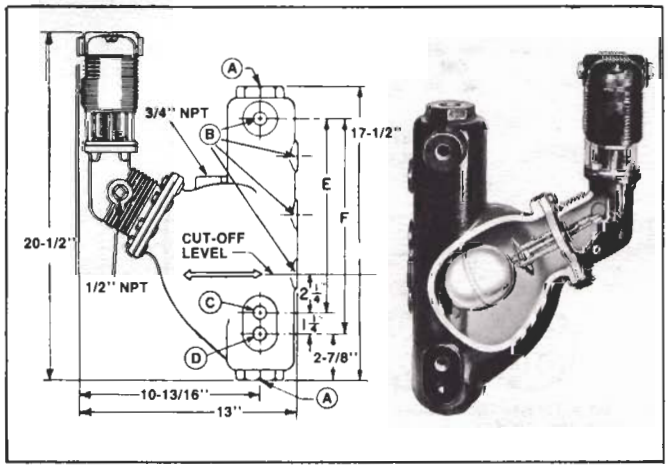

Product No.	A	B	C	D	E	F
193-7B	1"NPT	½" NPT		½" NPT		12¾"
193A-7B	1" NPT	½" NPT	½" NPT		11½"	
193B-7B	1¼" NPT	¾" NPT		¾" NPT		12¾"
193C-7B	1¼" NPT	¾" NPT	¾" NPT		11½"	

FOR PRESSURES UP TO 250 PSI

McDONNELL No. 94-7B PROPORTIONING CONTROL

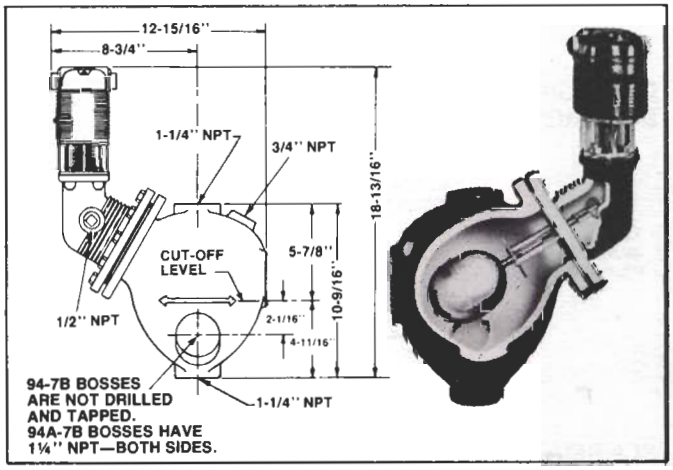

McDONNELL No. 194-7B PROPORTIONING CONTROL

Water column type body has tappings for steam trim.

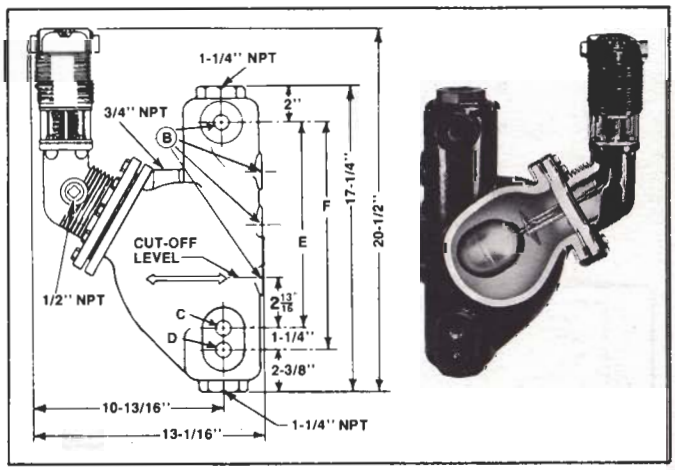

Product No.	B	C	D	E	F
194-7B	½" NPT	½" NPT		11-5/8"	
194A-7B	½" NPT		½" NPT		12-7/8"

Note: 3/4" try cock and gauge glass tappings available on special order.

MULTIPLE BOILER INSTALLATIONS

It is sometimes assumed that when two or more boilers are installed, it is a simple matter to arrange the steam piping and boiler feed piping in such a way as to produce equal water levels in all boilers. Although this objective is realized in a few installations, it is more generally true that other steps must be taken to obtain reasonable water level regulation.

A typical multiple boiler installation is illustrated below, showing the use of a common boiler feed pump, and individual electric proportioning control on each boiler.

With the boiler water level controlled in this manner, it becomes obvious that it makes little difference as to the size of boilers installed, or the relative positions of the normal water lines, as with this arrangement the water line in each boiler is individually controlled.

CONTROL SYSTEM ILLUSTRATED FOR EACH BOILER

- High Water Pump Cut-Off
- High Water Alarm
- Proportioning Control of Boiler Feed Pump Discharge Line (Continuous Pump Operation)
- Low Water Fuel Cut-Off of Automatic Burner
- Low Water Alarm

PIPING OF CONTROLS ON BOILER

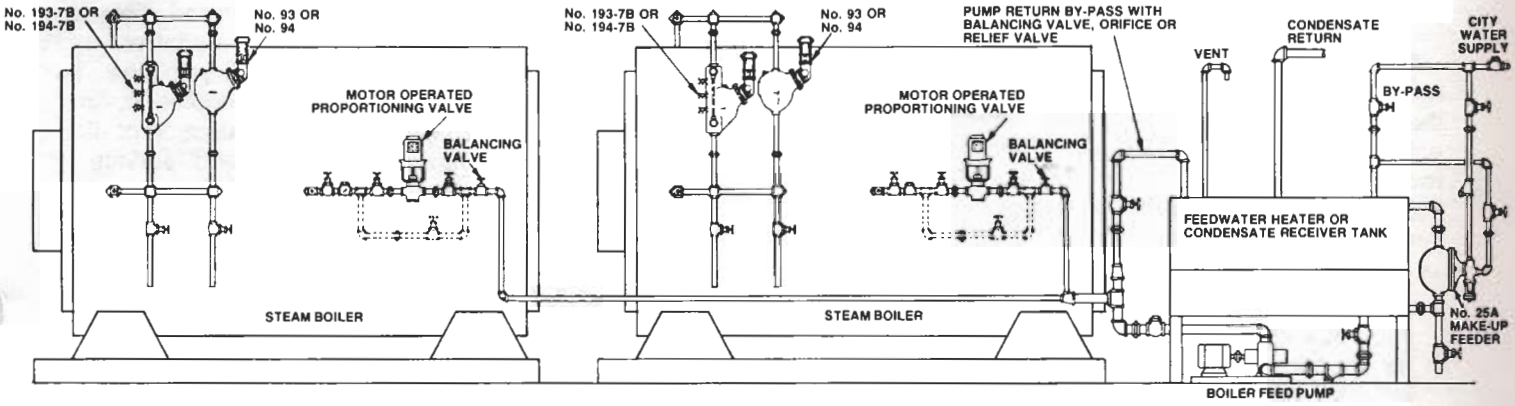

DIMENSIONS FOR LOCATING CONTROL ELEVATIONS

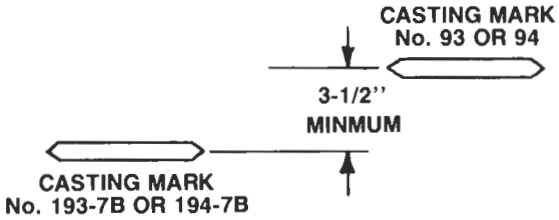

SCHEMATIC WIRING DIAGRAM

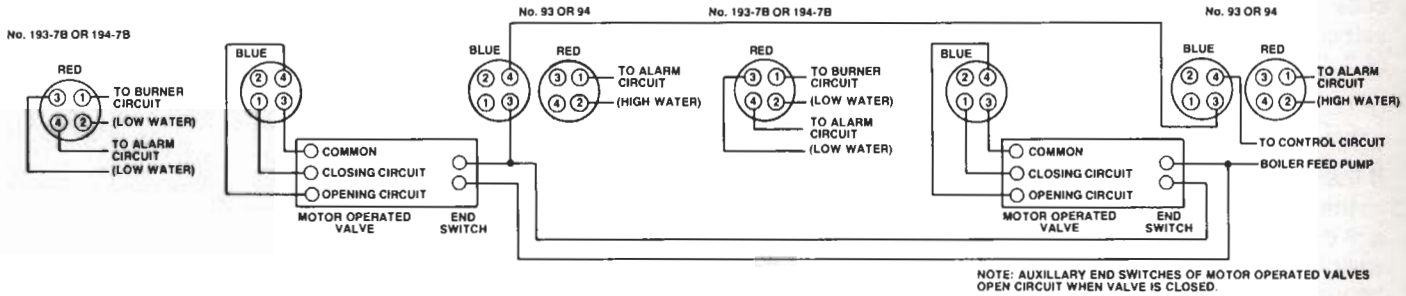

CONTROL SYSTEM ILLUSTRATED

- High Water Pump Cut-Off
- High Water Alarm
- Proportioning Control of Boiler Feed Pump Discharge Line (Continuous Pump Operation)
- Low Water Fuel Cut-Off of Automatic Burner
- Low Water Alarm

PIPING OF CONTROLS ON BOILER

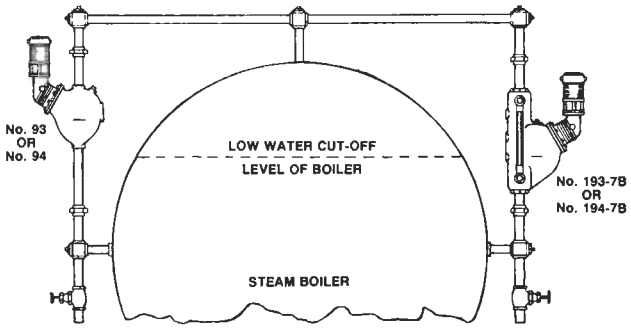

DIMENSIONS FOR LOCATING CONTROL ELEVATIONS

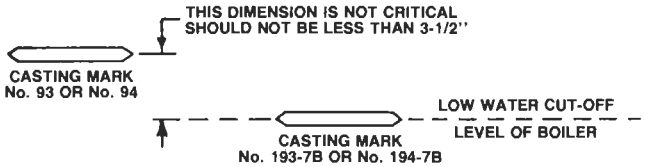

SCHEMATIC WIRING DIAGRAM

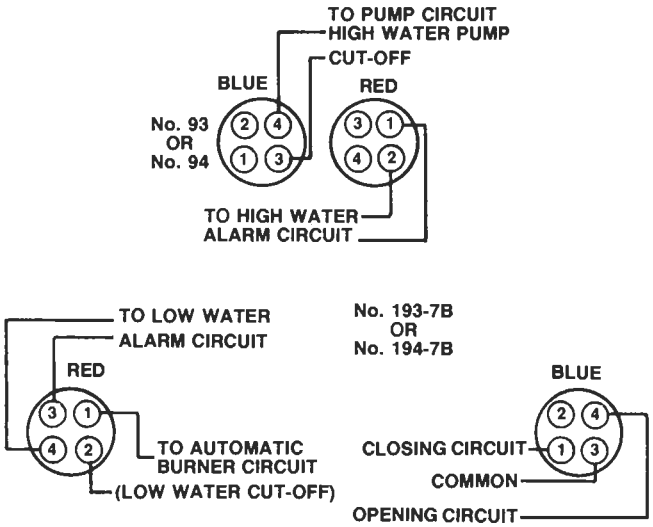

CONTROL SYSTEM ILLUSTRATED

- High Water Pump Cut-Off
- High Water Alarm
- Proportioning Control of Boiler Feed Pump Discharge Line (Continuous Pump Operation)
- Low Water Fuel Cut-Off of Automatic Burner
- Low Water Alarm

PIPING OF CONTROLS ON BOILER

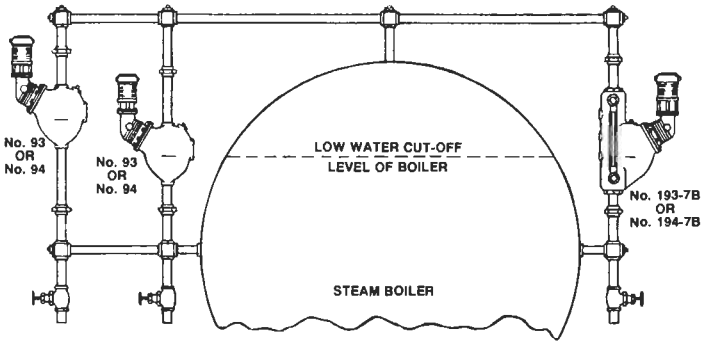

DIMENSIONS FOR LOCATING CONTROL ELEVATIONS

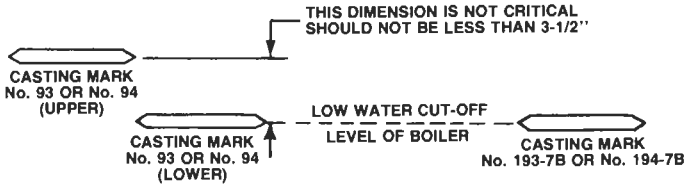

SCHEMATIC WIRING DIAGRAM

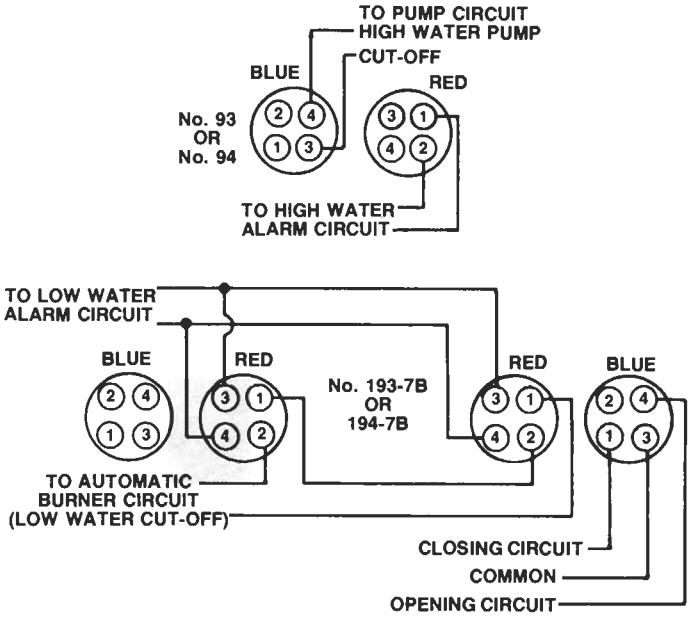

SIZING FOR CONDENSATE RECEIVERS
(Reprinted from MECHANICAL CONTRACTOR Magazine)

The following practice for selection of Condensate Receivers has been advocated by several engineers as a reliable guide procedure on installations where a float operated control is mounted on the boiler to regulate the boiler feed pump or modulating feed valve and therefore maintain a uniform boiler water line.

SIZING CONDENSATE RECEIVERS

For the normal installation, it is customary to select a receiver of sufficient size to hold a volume equivalent to the condensate evaporated by the boiler in one-third to one-half hour at the normal firing rate of the boiler.

EXAMPLE: 100 HP boiler evaporating 3,450 lbs. of steam per hour.

$$\frac{3450}{8.33} = 414.2 \text{ gal/hr.}$$

Receiver size would then be:

$$\frac{414.2}{2} = 207.1 \text{ gal.} \quad \text{OR} \quad \frac{414.2}{3} = 138.1 \text{ gal.}$$

Assuming 75% of the gross volume of the tank is usable, the receiver should have a gross volume of 184 to 276 gallons, which on the average for a 100 H.P. boiler would result in a 250 gallon receiver.

The extent to which the above selection might be modified will depend on the character of the system:

1) For instance, if the piping served by the boiler is a heating system extending over a considerable area, such as a one story factory building, the time required for the condensate to return will be slow. Under such circumstances, it is advisable to select a receiver of the larger capacity.
2) If the piping is concentrated in a high office building on a small ground area. Experience dictates that the condensate returns quickly and the smaller size receiver may be chosen.

RECEIVER TANK MAKE-UP WATER FEED CONTROL

If an adequately sized receiver tank is chosen, then it is preferred practice to mount a make-up water feeder valve in the lower one-third section of the tank. This permits an ample volume in the tank for the collection of the condensate during the time when the boiler feed pump is not operating. Further, the make-up water feeder should be selected with sufficient capacity to take care of the normal firing rate of the boiler. For example, in the case of a 100 H.P. boiler fired at rating, it is desirable to select a make-up water feeder having a feeding capacity of 3,450 lbs. of water per hour.

LOW WATER CUT-OFFS ON RECEIVER TANKS

If there is any likelihood that the make-up water supply to the feeder may be accidentally shut off for any reason, it is desirable to mount a float operated low water cut-off switch in the lower level of the tank. The low water cut-off, connected to the motor starter of the boiler feed pump, would stop the pump should a low water condition occur, thus preventing running a dry pump.

LARGE CONDENSATE RECEIVER TANK CONTROL

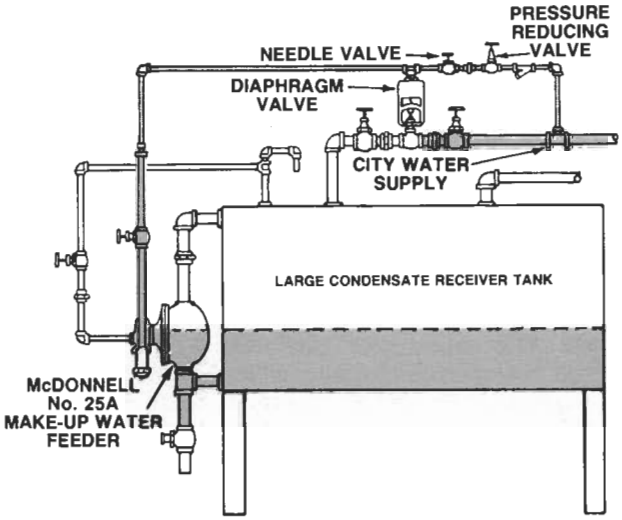

No. 25A USED AS PILOT VALVE.

On larger installations such as multiple boiler jobs, a higher volume of make-up water is required. This illustrates the McDonnell No. 25A used as a pilot valve (for dead-end service) in the receiver make-up line. This system provides accurate water level regulation, ample space for return condensate, a wide selection of piping arrangements and locations, and good service accessibility.

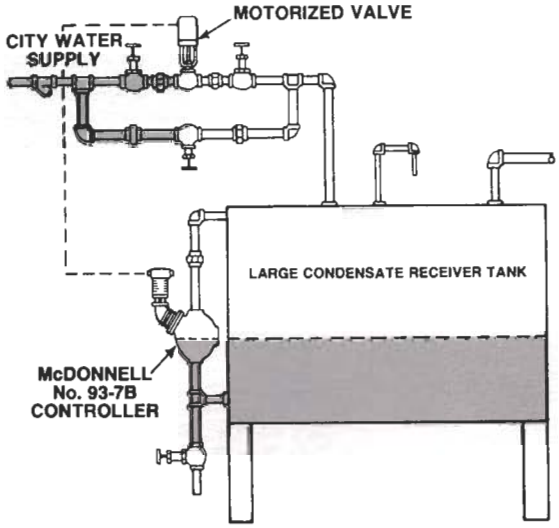

No. 93-7B or 94-7B AND MOTORIZED VALVE.

Another common means of supplying requisite feed-water to the receiving tank is by the use of a high capacity motor-operated type valve. This illustration shows the McDonnell No. 93-7B or 94-7B Controller installed to open and close the motor-operated valve whenever make-up water is required. This system provides flexibility of piping, and dependability of operation.

ITT McDonnell & Miller
ITT Fluid Technology Corporation

Printed in U.S.A. 10-87

3500 N. Spaulding Ave. • Chicago, IL 60618 • Phone: (312) 267-1600, FAX: (312) 267-0991, Telex: 25-3376

GRUNDFOS **INSTRUCTIONS**
Installation and Operation

CR, CRI, CRX, CRN, CRT

Vertical Multistage Centrifugal Pumps

Please leave these instructions with the pump for future reference

BE > THINK > INNOVATE >

GRUNDFOS®

SAFETY WARNING

Electrical Work

All electrical work should be performed by a qualified electrician in accordance with the latest edition of the National Electrical Code, local codes and regulations.

Shock Hazard

A faulty motor or wiring can cause electrical shock that could be fatal, whether touched directly or conducted through standing water. For this reason, proper grounding of the pump to the power supply's grounding terminal is required for safe installation and operation.

In all installations, the above-ground metal plumbing should be connected to the power supply ground as described in Article 250-80 of the National Electrical Code.

Nameplate Data

Type key

CR, CRI, CRN 1s, 1, 3, 5, 10, 15, and 20

Example CR 3 -10 A FGJ A E HQQE

- Type range: CR, CRI, CRN
- Rated flow rate in [m³/h] (x 5=GPM)
- Number of impellers
- Code for pump version
- Code for pipe connection
- Code for materials
- Code for rubber parts
- Code for shaft seal

CR, CRX, CRN 8 and 16

Example CR 16 - 30 /2 U G A AUUE

- Type range: CR, CRN
- Rated flow rate in [m³/h] (x 5=GPM)
- Number of stages x 10
- Number of impellers (used only if the pump has fewer impellers than stages)
- Code for pump version
- Code for pipe connection
- Code for materials
- Code for shaft seal and rubber parts

CR, CRN 32, 45, 64, AND 90

Example CR 32 -2 -1 U G A E KUHE

- Type range: CR, CRN
- Rated flow rate in [m³/h] (x 5=GPM)
- Number of impellers
- Number of reduced diameter impellers
- Code for pump version
- Code for pipe connection
- Code for materials
- Code for rubber pump parts
- Code for shaft seal

Codes

Example U FGJ A E HQQE

Pump version

A	*Basic version pump
U	*NEMA version pump
B	Oversize motor, one flange size bigger
F	CR pump for high temperatures (Cool-Top™)
H	Horizontal version
HS	High pressure pump with over-synchronous speed and reversed direction of rotation
I	Different pressure rating
K	Low NPSH
M	Magnetic drive
P	Undersize motor
R	Horizontal version with bearing bracket
SF	High pressure pump with reversed chamber stack and direction of rotation
T	Oversize motor, two flange sizes bigger
X	**Special version

Pipe connection

A	Oval flange
B	NPT thread
C	Clamp coupling
CA	FlexiClamp
CX	TriClamp
F	DIN flange
G	ANSI flange
J	JIS flange
N	Changed diameter of ports
O	Externally threaded, union
P	PJE coupling
X	Special version

Materials

A	Basic version
D	Carbon-graphite filled PTFE (bearings)
G	Stainless steel parts of 316 SS
GI	Base plate and flanges of 316 SS
I	Stainless steel parts of 304 SS
II	Base plate and flange of 304 SS
K	Bronze (bearings)
S	SiC bearing ring + PTFE neck ring (only CR, CRN 32 to 90)
T	Titanium
X	Special version

Code for rubber parts

E	EPDM
F	FXM (Flouraz®)
K	FFKM (Kalrez®)
V	FKM (Viton®)

Shaft seal H Q Q E

A	O-ring seal with fixed driver
B	Rubber bellows seal
D	O-ring seal, balanced
E	Cartridge seal with O-ring
H	Balanced cartridge seal with O-ring
K	Cartridge shaft seal with metal bellows
O	Double seal, back to back
P	Double seal, tandem
R	O-ring seal with reduced face
X	Special version

B	Carbon, synthetic resin-impregnated
H	Cemented tungsten carbide, embedded hybrid
Q	Silicon carbide
U	Cemented tungsten carbide

E	EPDM
F	FXM (Flouraz®)
K	FFKM (Kalrez®)
V	FKM (Viton®)

* In August 2003 the NEMA pump code was discontinued for all material numbers created by GRUNDFOS manufacturing companies in North America. The NEMA version pump code will still remain in effect for existing material numbers. NEMA version pumps built in North America after this change will have either an A or U as the pump version code depending on the date the material number was created.

** If a pump incorporates more than two pump versions, the code for the pump version is X. X also indicates special pump versions not listed above.

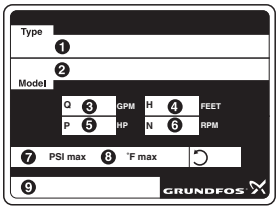

1. Type designation
2. Model, material number, production code
3. Gallons per minute at rated RPM
4. Head in feet at nameplate flow
5. Pump horsepower
6. Rated RPM
7. Maximum PSI
8. Maximum fluid temperature
9. Production country

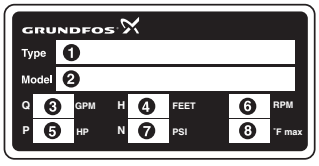

Model Key

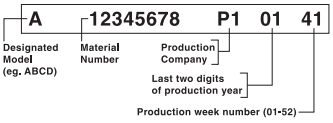

Pre-installation Checklist

1. Confirm you have the right pump

Read the pump nameplate to make sure it is the one you ordered.

CR	—	Centrifugal pump with standard cast iron and 304 stainless steel construction
CRI or CRX	—	Centrifugal pump; all parts in contact with water are 304 stainless steel construction
CRN	—	Centrifugal pump; all parts in contact with water are 316 stainless steel construction
CRT	—	Centrifugal pump; all parts in contact with water are titanium construction
CRE	—	Centrifugal pump with a Grundfos MLE VFD motor attached

2. Check the condition of the pump

The shipping carton your pump came in is specially designed around your pump during production to prevent damage. As a precaution, the pump should remain in the carton until you are ready to install it. Examine the pump for any damage that may have occurred during shipping. Examine any other parts of the shipment as well for any visible damage.

If the pump is shipped as a complete unit (motor attached to pump end), the position of the coupling (that connects the pump shaft to the motor shaft) is set at factory specifications. No adjustment is required. If the unit is delivered as a pump end only, follow the adjustment procedures on pages 10-11.

Pump without Motor (CR(I)(N) 1s, 1, 3, 5, 10, 15, and 20 Only): If you purchased a pump without a motor, the shaft seal has been set by the factory. Do not loosen the three set screws on the shaft seal when attaching the motor.

Pump without Motor (CR(N) 32, 45, 64 & 90 Only): If you purchased a pump without a motor, you must install the seal. The seal is protected in its own sub boxing within the pump packaging crate. To protect the shaft and bearings during shipment, a shaft holder protective device is used. This device must be removed prior to installation of the seal. Read the seal installation instructions which are included in the pump package.

3. Verify electrical requirements

Verification of the electrical supply should be made to be certain the voltage, phase and frequency match that of the pump motor. The proper operating voltage and other electrical information can be found on the motor nameplate. These motors are designed to run on ±10% of the nameplate-rated voltage. For dual-voltage motors, the motor should be internally connected to operate on the voltage closest to the 10% rating, i.e., a 208 voltage motor wired per the 208 volt connection diagram. The wiring connection diagram can be found on either a plate attached to the motor or on a diagram inside the terminal box cover. If voltage variations are larger than ±10%, do not operate the pump.

4. Is the application correct for this pump?

Compare the pump's nameplate data or its performance curve with the application in which you plan to install it. Will it perform the way you want it to perform? Also, make sure the application falls within the following limits:

Type	Designed to pump...
CR	Hot and chilled water, boiler feed, condensate return, glycols and solar thermal fluids.
CRI/CRN/CRX	Deionized, demineralized and distilled water. Brackish water and other liquids unsuitable for contact with iron or copper alloys. (Consult manufacturer for specific liquid compatibilities.)
CRN-SF	High pressure washdown, reverse osmosis, or other high pressure applications.
CRT	Salt water, chloride based fluids and fluids approved for titanium.

Operating Conditions

Pump	Fluid Temperatures
CR(I)(N) 1s, 3, 5, 10, 15, and 20	-4 to +248°F (-20 to +120°C)
*CR(N) 32, 45, 64, and 90	-22 TO +248°F (-30 TO +120°C)
CR(N)(X)(T) 2, 4, 8, 16	-4 to +248°F (-20 to +120°C)
CRN-SF	-4 to +221°F (-15 to +105°C)
with Cool-Top™	up to +356°F (+180°C)

All motors are designed for continuous duty in +104°F (+40°C) ambient air conditions. For higher ambient temperature conditions consult Grundfos.

* xUBE Shaft Seals are recommended for temperatures above +200°F. Pumps with hybrid shaft seals can only operate up to +200°F (+90°C). Pumps with xUUE shaft seals can be operated down to -40°F (-40°C) (where "x" is the seal type).

Pre-installation Checklist (continued)

Minimum Inlet Pressures

All CR, CRI, CRX, CRN	NPSHR + 2 feet
CRN-SF	29 psi (2 bar)

Maximum Inlet Pressures

Pump Type	50 Hz Stages	60 Hz Stages	Max psi/bar
CR, CRI, CRN 1s	2 to 36	2 to 25	145 / 10
		27	217 / 15
CR, CRI, CRN 1	2 to 36	2 to 25	145 / 10
		27	217 / 15
CR, CRI, CRN 3	2 to 29	2 to 15	145 / 10
	31 to 36	17 to 25	217 / 15
CR, CRI, CRN 5	3 to 16	2 to 9	145 / 10
	18 to 36	10 to 24	217 / 15
CR, CRI, CRN 10	1 to 6	1 to 5	116 / 8
	7 to 22	6 to 18	145 / 10
CR, CRI, CRN 15	1 to 3	1 to 2	116 / 8
	4 to 17	3 to 12	145 / 10
CR, CRI, CRN 20	1 to 3	1	116 / 8
	4 to 17	2 to 10	145 / 10
CR, CRN 32	1-1 to 4	1-1 to 2	58 / 4
	5-2 to 10	3-2 to 6	145 / 10
	11 to 14	7-2 to 11-2	217 / 15
CR, CRN 45	1-1 to 2	1-1 to 1	58 / 4
	3-2 to 5	2-2 to 3	145 / 10
	6-2 to 13-2	4-2 to 8-1	217 / 15
CR, CRN 64	1-1 to 2-2	1-1	58 / 4
	2-1 to 4-2	1 to 2-1	145 / 10
	4-1 to 8-1	2 to 5-2	217 / 15
CR, CRN 90	1-1 to 1		58 / 4
	2-2 to 3-2	1-1 to 1	145 / 10
	3 to 6	2-2 to 4-1	217 / 15
CRT 2	2 to 11	2 to 6	145 / 10
	13 to 26	7 to 18	217 / 15
CRT 4	1 to 12	1 to 7	145 / 10
	14 to 22	8 to 16	217 / 15
CRT 8	1 to 20	1 to 16	145 / 10
CRT 16	2 to 16	2 to 10	145 / 10
CR, CRX, CRN 8	1 to 6	1 to 4	87 / 6
	7 to 20	5 to 16	145 / 10
CR, CRX, CRN 16	2 to 3	2 to 3	87 / 6
	4 to 16	4 to 10	145 / 10
CRN-SF	all	all	72 / 5*
			362 / 25**

* while pump is off or during start-up
** during operation

Maximum Operating Pressures

at 250° F (194° F for CRN-SF)

Pump type/ connection	50 Hz Stages	60 Hz Stages	Max psi/bar
CR, CRI, CRN 1s			
Oval flange	1 to 23	1 to 17	232 / 16
FGJ, PJE	1 to 36	1 to 27	362 / 25
CR, CRI, CRN 1			
Oval flange	1 to 23	1 to 17	232 / 16
FGJ, PJE	1 to 36	1 to 27	362 / 25
CR, CRI, CRN 3			
Oval flange	1 to 23	1 to 17	232 / 16
FGJ, PJE	1 to 36	1 to 27	362 / 25
CR, CRI, CRN 5			
Oval flange	1 to 22	1 to 16	232 / 16
FGJ, PJE	1 to 36	1 to 24	362 / 25
CR, CRI, CRN 10			
Oval flange		1 to 10	145 / 10
Oval flange	1 to 16		232 / 16
FGJ, GJ, PJE	1 to 16	1 to 10	232 / 16
FGJ, GJ, PJE	17 to 22	12 to 17	362 / 25
CR, CRI, CRN 15			
Oval flange	1 to 7	1 to 5	145 / 10
FGJ, GJ, PJE	1 to 10	1 to 8	232 / 16
FGJ, GJ, PJE	12 to 17	9 to 12	362 / 25
CR, CRI, CRN 20			
Oval flange	1 to 7	1 to 5	145 / 10
FGJ, GJ, PJE	1 to 10	1 to 7	232 / 16
FGJ, GJ, PJE	12 to 17	8 to 10	362 / 25
CR, CRN 32	1-1 to 7	1-1 to 5	232 / 16
	8-2 to 12	6-2 to 8	362 / 25
	13-2 to 14	9-2 to 11-2	580 / 40
CR, CRN 45	1-1 to 5	1-1 to 4-2	232 / 16
	6-2 to 9	4-1 to 6	362 / 25
	10-2 to 13-2	7-2 to 8-1	580 / 40
CR, CRN 64	1-1 to 5	1-1 to 3	232 / 16
	6-2 to 8-1	4-2 to 5-2	362 / 25
CR, CRN 90	1-1 to 4	1-1 to 3	232 / 16
	5-2 to 6	4-2 to 4-1	362 / 25
CRT 2	2 to 26	2 to 18	305 / 21
CRT 4	1 to 22	1 to 16	305 / 21
CR, CRX, CRN, CRT 8	1 to 12	1 to 8	232 / 16
	14 to 20	10 to 16	362 / 25
CR, CRX, CRN, CRT 16	1 to 8	1 to 8	232 / 16
	10 to 16	10 to 12	362 / 25

Consult Grundfos for other working conditions.

Select pump location

The pump should be located in a dry, well-ventilated area which is not subject to freezing or extreme variation in temperature. Care must be taken to ensure the pump is mounted at least 6 inches (150 mm) clear of any obstruction or hot surfaces. The motor requires an adequate air supply to prevent overheating and adequate vertical space to remove the motor for repair. For open systems requiring suction lift the pump should be located as close to the water source as possible to reduce piping losses.

Foundation

Concrete or similar foundation material should be used to provide a secure, stable mounting base for the pump. Bolt hole center line dimensions for the various pump types are given in Figure 1. Secure the pump to the foundation using all four bolts and shim pump base to assure the pump is vertical and all four pads on the base are properly supported. Uneven surfaces can result in pump base breakage when mounting bolts are tightened.

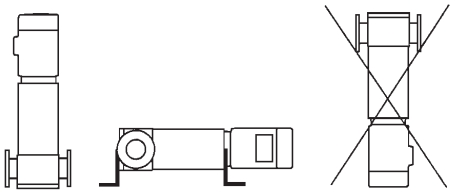

The pump can be installed vertically or horizontally (see drawing at right). Ensure that an adequate supply of cool air reaches the motor cooling fan. The motor must never fall below the horizontal plane.

Arrows on the pump base show the direction of flow of liquid through the pump.

To minimize possible noise from the pump, it is advisable to fit expansion joints on either side of the pump and anti-vibration mountings between the foundation and the pump.

Isolating valves should be fitted either side of the pump to avoid draining the system if the pump needs to be cleaned, repaired or replaced.

Figure 1: Bolt Hole Centers

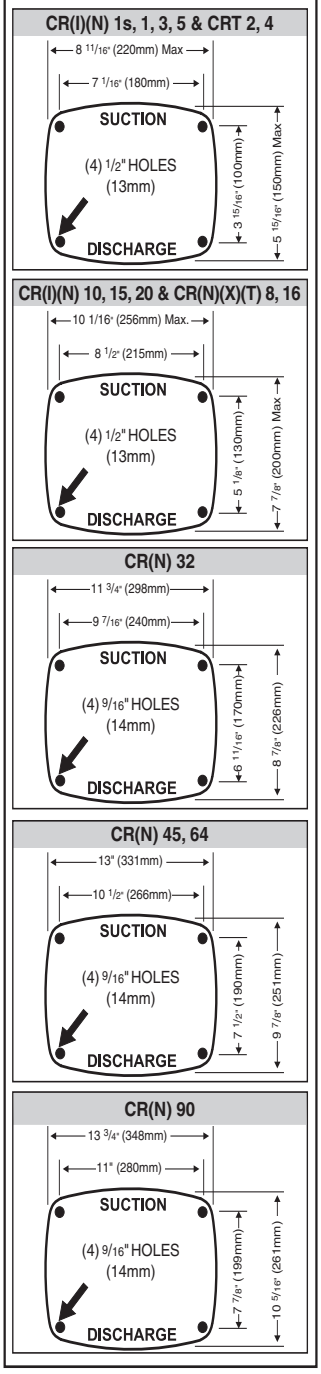

Pipework

NOTE: The CR(N) pumps are shipped with covered suction and discharge. The covers must be removed before the final pipe flange to pump connections are made.

Suction pipe

The suction pipe should be adequately sized and run as straight and short as possible to keep friction losses to a minimum (minimum of four pipe diameters straight run prior to the suction flange). Avoid using unnecessary fittings, valves or accessory items. Butterfly or gate valves should only be used in the suction line when it is necessary to isolate a pump because of a flooded suction condition. This would occur if the water source is above the pump. See Figures 2 and 3. Flush piping prior to pump installation to remove loose debris.

Flooded Suction

Figure 2

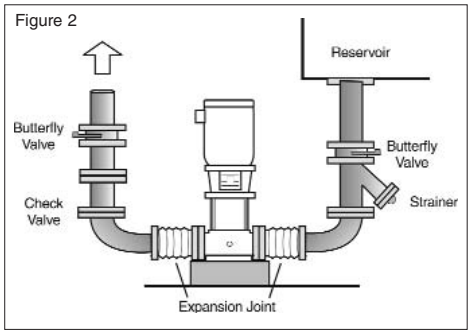

Suction Lift*

Figure 3

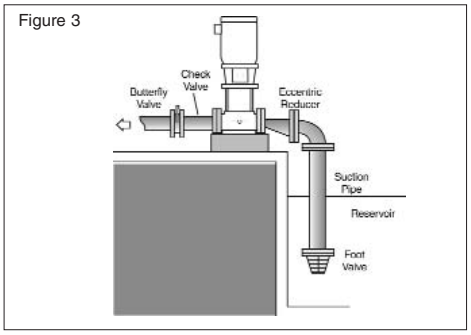

* CRN-SF pumps cannot be used for suction lift. The suction pipe should have a fitting on it for priming.

Minimum suction pipe sizes

The following recommended suction pipe sizes are the smallest sizes which should be used with any specific CR pump type. The suction pipe size should be verified with each installation to ensure good pipe practices are being observed and excess friction losses are not encountered. High temperatures may require larger diameter pipes to reduce friction and improve NPHSA.

CR(I)(N) 1s, 1, 3, CRT 2	1"	Nominal diameter sch 40 pipe
CR(I)(N) 5, CRT 4	1 1/4"	Nominal diameter sch 40 pipe
CR(I)(N)(X) 10, 15, 20, 8, 16	2"	Nominal diameter sch 40 pipe
CR(N) 32	2 1/2"	Nominal diameter sch 40 pipe
CR(N) 45	3"	Nominal diameter sch 40 pipe
CR(N) 64	4"	Nominal diameter sch 40 pipe
CR(N) 90	4"	Nominal diameter sch 40 pipe

Discharge piping

It is suggested that a check valve and isolation valve be installed in the discharge pipe. Pipe, valves and fittings should be at least the same diameter as the discharge pipe or sized in accordance with good piping practices to reduce excessive fluid velocities and pipe friction losses. **Pipe, valves and fittings must have a pressure rating equal to or greater than the maximum system pressure.** Before the pump is installed it is recommended that the discharge piping be pressure checked to at least the maximum pressure the pump is capable of generating or as required by codes or local regulations.

Whenever possible, avoid high pressure loss fittings, such as elbows or branch tees directly on either side of the pump. The piping should be adequately supported to reduce thermal and mechanical stresses on the pump. Good installation practice recommends the system be thoroughly cleaned and flushed of all foreign materials and sediment prior to pump installation. Furthermore, the pump should never be installed at the lowest point of the system due to the natural accumulation of dirt and sediment. If there is excessive sediment or suspended particles present, it is advised a strainer or filter be used. Grundfos recommends that pressure gauges be installed on inlet and discharge flanges or in pipes to check pump and system performance.

NOTE: To avoid problems with waterhammer, fast closing valves must not be used in CRN-SF applications.

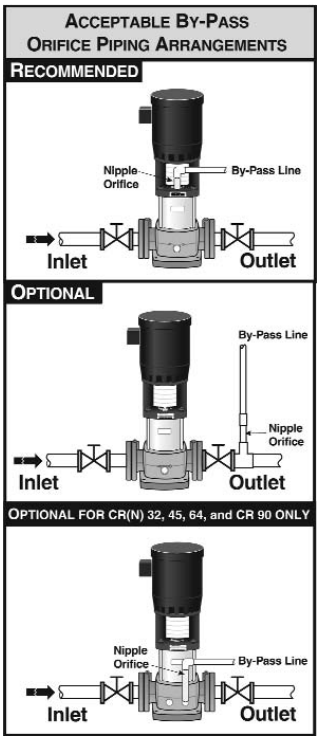

Table A
Minimum Continuous Duty Flow Rates for CR(I)(X)(N)(T)

Pump Type	Min. Flow in GPM at Liquid Temperature			Cool-Top™
	min°F to 176°F min°C to 80°C	at 210°F at 99°C	at 248°F at 120°C	at 356°F at 180°C
CR, CRI, CRN 1s	0.5	0.7	1.2	1.2*
CR, CRI, CRN 1	0.9	1.3	2.3	2.3*
CR, CRI, CRN 3	1.6	2.4	4.0	4.0*
CR, CRI, CRN 5	3.0	4.5	7.5	7.5*
CR, CRI, CRN 10	5.5	8.3	14	14*
CR, CRI, CRN 15	9.5	14	24	24*
CR, CRI, CRN 20	11	17	28	28*
CR, CRN 32	14	21	35	35*
CR, CRN 45	22	33	55	55*
CR, CRN 64	34	51	85	85*
CR, CRN 90	44	66	110	110*
CRT 2	1.3	2.0	3.3	N/A
CRT 4	3.0	4.5	7.5	N/A
CR, CRX, CRN, CRT 8	4.0	6.0	10	10*
CR, CRX, CRN, CRT 16	8.0	12	20	20*

*Grundfos Cool-Top is only available in the following pump types.

Pump Type	CR 1s	CR 1	CR 3	CR 5	CR 10	CR 15	CR 20	CR 32	CR 45	CR 64	CR 90	CR 8	CR 16
Standard (CR)								•	•	•	•		
I Version (CRI)	•	•	•	•	•	•	•						
N Version (CRN)	•	•	•	•	•	•	•	•	•	•	•	•*	•*

* CRN 8 and 16 are only available in CRN-S. A CRN-S is a CRN pump without staybolts. All rubber parts are FXM.

Check valves

A check valve may be required on the discharge side of the pump to prevent the pump's inlet pressure from being exceeded. For example, if a pump with no check valve is stopped because there is no demand on the system (all valves are closed), the high system pressure on the discharge side of the pump will "find" its way back to the inlet of the pump. If the system pressure is greater than the pump's maximum inlet pressure rating, the limits of the pump will be exceeded and a check valve needs to be fitted on the discharge side of the pump to prevent this condition. **This is especially critical for CRN-SF applications because of the very high discharge pressures involved. As a result, most CRN-SF installations require a check valve on the discharge piping.**

Bypass

A bypass should be installed in the discharge pipe if there is any possibility the pump may operate against a closed valve in the discharge line. Flow through the pump is required to ensure adequate cooling and lubrication of the pump is maintained. See Table A for minimum flow rates. Elbows should be a minimum of 12" from the orifice discharge to prevent erosion.

Temperature rise

It may sometimes be necessary to stop the flow through a pump during operation. At shut-off, the power to the pump is transferred to the pumped liquid as head, causing a temperature rise in the liquid. The result is risk of excess heating of and consequent damage to the pump. The risk depends on the temperature of the pumped liquid and for how long the pump is operating without flow. (See temperature rise chart.)

Pump Type	Time for Temperature Rise of 18° F (10°C)	
	Seconds	Minutes
CR 1s, 1, 3	210	3.5
CR 5	240	4.0
CR 10	210	3.5
CR 15	150	2.5
CR 20	120	2.0
CR 32, 45, 64, 90	60	1.0

Conditions/Reservations

The listed times are subject to the following conditions/reservations:

- No exchange of heat with the surroundings.
- The pumped liquid is water with a specific heat of 1.0 $\frac{Btu}{lb.°F}$ (4.18 $\frac{kJ}{kg°C}$).
- Pump parts (chambers, impellers and shaft) have the same thermal capacity as water.
- The water in the base and the pump head is not included.

These reservations should give sufficient safety margin against excessive temperature rise. The maximum temperature must not exceeed the pump maximum rating.

For Pump Ends With Bellows Seals Only (CR 2, 4, 8, 16)

Remove shaft seal protectors before installing motor (see diagram at below).

1. Remove coupling guards.
2. Remove coupling halves.
3. Remove shaft seal protectors.
4. Follow motor replacement instructions on page 10.

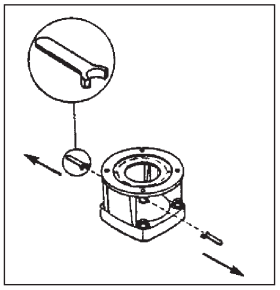

Electrical

WARNING

THE SAFE OPERATION OF THIS PUMP REQUIRES THAT IT BE GROUNDED IN ACCORDANCE WITH THE NATIONAL ELECTRICAL CODE AND LOCAL GOVERNING CODES OR REGULATIONS. CONNECT THE GROUND WIRE TO THE GROUNDING SCREW IN THE TERMINAL BOX AND THEN TO THE ACCEPTABLE GROUNDING POINT.

All electrical work should be performed by a qualified electrician in accordance with the latest edition of the National Electrical Code, local codes and regulations.

Motor

Grundfos CR pumps are supplied with heavy-duty 2-pole (3600 RPM nominal), ODP or TEFC, NEMA C frame motors selected to our rigid specifications. Motors with other enclosure types and for other voltages and frequencies are available on a special-order basis. CRN-SF pumps are supplied with an IEC (metric) type motor with a reverse thrust bearing. If you are replacing the pumping unit, but are using a motor previously used on another CR pump, be sure to read the "Motor Replacement" section on page 10 for proper adjustment of the coupling height.

Position of Terminal Box

The motor terminal box can be turned to any of four positions in 90° steps. To rotate the terminal box, remove the four bolts securing the motor to the pump but do not remove the shaft coupling; turn the motor to the desired location; replace and securely tighten the four bolts. See Figure 4.

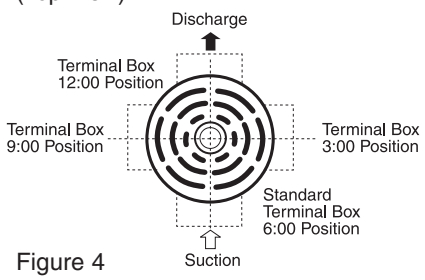

Figure 4

Field Wiring

Wire sizes should be based on the current carrying properties of a conductor as required by the latest edition of the National Electrical Code or local regulations. Direct on line (D.O.L.) starting is approved due to the extremely fast run-up time of the motor and the low moment of inertia of pump and motor. If D.O.L. starting is not acceptable and reduced starting current is required, an auto transformer, resistant starter or soft start should be used. It is suggested that a fused disconnect be used for each pump where service and standby pumps are installed.

Motor Protection

1. **Single-Phase Motors:**

   With the exception of 7 1/2 and 10 HP motors which require external protection, single-phase CR pumps are equipped with multi-voltage, squirrel-cage induction motors with built-in thermal protection.

2. **Three-Phase Motors**

   CR pumps with three-phase motors must be used with the proper size and type of motor-starter to ensure the motor is protected against damage from low voltage, phase failure, current imbalance and overloads. A properly sized starter with manual reset and ambient-compensated extra quick trip in all three legs should be used. The overload should be sized and adjusted to the full-load current rating of the motor. Under no circumstances should the overloads be set to a higher value than the full load current shown on the motor nameplate. This will void the warranty. Overloads for auto transformers and resistant starters should be sized in accordance with the recommendations of the manufacturer. Three phase MLE motors (CRE-Pumps) require only fuses as a circuit breaker. They do not require a motor starter. Check for phase imbalance (worksheet is provided on page 15).

   NOTE: Standard allowable phase imbalance difference is 5%.

3. **CRN-SF**

   The CRN-SF is typically operated in series with a feed pump. Because the maximum allowable inlet pressure of the CRN-SF increases from 73 psi (when pump is off and during start-up) to 365 psi (during operation), a control device must be used to start the CRN-SF pump one second before the feed pump starts. Similarly, the CRN-SF must stop one second after the feed pump stops.

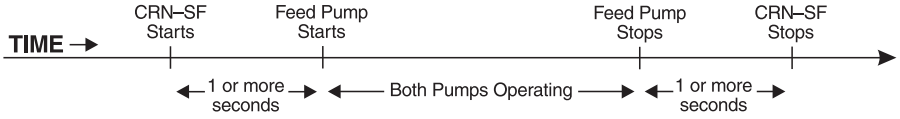

Starting the Pump the First Time

Figure 5a

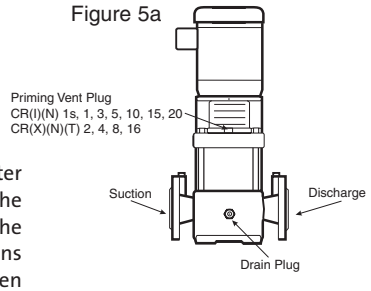

Figure 5b

CR(N) 32, 45, 64 & 90

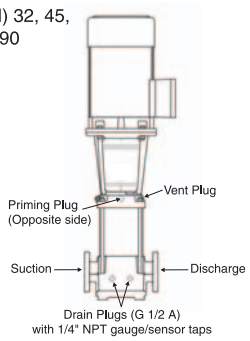

Priming

To prime the pump in a closed system or an open system where the water source is above the pump, close the pump isolation valve(s) and open the priming plug on the pump head. See Figures 5A and 5B. Gradually open the isolation valve in the suction line until a steady stream of airless water runs out the priming port. Close the plug and securely tighten. Completely open the isolation valves.

In open systems where the water level is below the pump inlet, the suction pipe and pump must be filled and vented of air before starting the pump. Close the discharge isolation valve and remove the priming plug. Pour water through the priming hole until the suction pipe and pump are completely filled with water. If the suction pipe does not slope downward from the pump toward the water level, the air must be purged while being filled. Replace the priming plug and securely tighten.

1. Switch power off.
2. Check to make sure the pump has been filled and vented.
3. Remove the coupling guard and rotate the pump shaft by hand to be certain it turns freely.
4. Verify that the electrical connections are in accordance with the wiring diagram on the motor.
5. Switch the power on and observe the direction of rotation. When viewed from the top, the pump should rotate counter-clockwise (clockwise for CRN-SF).
6. To reverse the direction of rotation, first switch OFF the supply power.
7. On three-phase motors, interchange any two power leads at the load side of the starter. On single-phase motors, see connection diagram on nameplate. Change wiring as required.
8. Switch on the power and again check for proper motor rotation. Once rotation has been verified, switch off power again. Do not attempt to reinstall the coupling guards with the motor energized. Replace the coupling guard if the rotation is correct. After guards are in place the power can be reapplied.

NOTE: Motors should not be run unloaded or uncoupled from the pump at any time; damage to the motor bearings will occur.

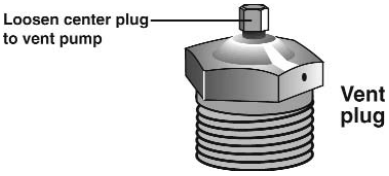

REMINDER: Do not start the pump before priming or venting the pump. Never operate the pump dry.

Operating Parameters

CR multi-stage centrifugal pumps installed in accordance with these instructions and sized for correct performance will operate efficiently and provide years of service. The pumps are water-lubricated and do not require any external lubrication or inspection. The motors will require periodic lubrication as noted in the following Maintenance Section.

Under no circumstances should the pump be operated for any prolonged periods of time without flow through the pump. This can result in motor and pump damage due to overheating. A properly sized relief valve should be installed to allow sufficient water to circulate through the pump to provide adequate cooling and lubricaton of the pump bearings and seals.

Pump cycling

Pump cycling should be checked to ensure the pump is not starting more than:

20 times per hour on 1/3 to 5 HP models
15 times per hour on 7 1/2 to 15 HP models
10 times per hour on 20 to 60 HP models

Rapid cycling is a major cause of premature motor failure due to increased heat build-up in the motor. If necessary, adjust controls to reduce the frequency of starts and stops.

Boiler-feed installations

If the pump is being used as a boiler-feed pump, make sure the pump is capable of supplying sufficient water throughout its entire evaporation and pressure ranges. Where modulating control valves are used, a bypass around the pump must be installed to ensure pump lubrication (see "Minimum Continuous Duty Flow Rates").

Freeze Protection

If the pump is installed in an area where freezing could occur, the pump and system should be drained during freezing temperatures to avoid damage. To drain the pump, close the isolation valves, remove the priming plug and drain plug at the base of the pump. Do not replace the plugs until the pump is to be used again. Always replace the drain plug with the original or exact replacement. **Do not** replace with a standard plug. Internal recirculation will occur, reducing the output pressure and flow.

Motor Inspection

Inspect the motor at regular intervals, approximately every 500 hours of operation or every three months, whichever occurs first. Keep the motor clean and the ventilation openings clear. The following steps should be performed at each inspection:

WARNING:

DO NOT TOUCH ELECTRICAL CONNECTIONS BEFORE YOU FIRST ENSURE THAT POWER HAS BEEN DISCONNECTED. ELECTRICAL SHOCK CAN CAUSE SERIOUS OR FATAL INJURY. ONLY QUALIFED PERSONNEL SHOULD ATTEMPT INSTALLATION, OPERATION, AND MAINTENANCE OF THIS EQUIPMENT.

1. Check that the motor is clean. Check that the interior and exterior of the motor is free of dirt, oil, grease, water, etc. Oily vapor, paper, pulp, textile lint, etc. can accumulate and block motor ventilation. If the motor is not properly ventilated, overheating can occur and cause early motor failure.
2. Use an Ohmmeter ("Megger") periodically to ensure that the integrity of the winding insulation has been maintained. Record the Ohmmeter readings. Immediately investigate any significant drop in insulation resistance.
3. Check all electrical connectors to be sure that they are tight.

Motor Lubrication

Electric motors are pre-lubricated at the factory and do not require additional lubrication at start-up. Motors without external grease fittings have sealed bearings that cannot be re-lubricated. Motors with grease fittings should **only** be lubricated with approved types of grease. Do not **over-grease** the bearings. Over greasing will cause increased bearing heat and can result in bearing/motor failure. Do not mix petroleum grease and silicon grease in motor bearings.

Bearing grease will lose its lubricating ability over time, not suddenly. The lubricating ability of a grease (over time) depends primarily on the type of grease, the size of the bearings, the speed at which the bearings operate and the severity of the operating conditions. Good results can be obtained if the following recommendations are used in your maintenance program. It should also be noted that pumps with more stages, pumps running to the left of the performance curve, certain pump ranges may have higher thrust loads. Pumps with high thrust loads should be greased according to the next service interval level.

Severity of Service	Ambient Temperature (Maximum)	Environment	Approved Types of Grease
Standard	+104°F (+40°C)	Clean, little corrosion	See motor nameplate for grease type or compatible equivalent type of grease
Severe	+122°F (+50°C)	Moderate dirt, corrosion	
Extreme	>+122°F (+50°C) or Class H insulation	Severe dirt, abrasive dust, corrosion	

If pump is fitted with a bearing flange that requires grease, see the stickers on either the bearing flange or coupling guards for proper grease type and greasing schedule.

Motor Lubrication Schedule

NEMA/(IEC) Frame Size	Standard Service Interval	Severe Service Interval	Extreme Service Interval	Weight of Grease to Add Oz./(Grams)	Volume of Grease to Add In^3/(Teaspoons)
Up through 210 (132)	5500 hrs.	2750 hrs.	550 hrs.	0.30 (8.4)	0.6 (2)
Over 210 through 280 (180)	3600 hrs.	1800 hrs.	360 hrs.	0.61 (17.4)*	1.2 (3.9)*
Over 280 up through 360 (225)	2200 hrs.	1100 hrs.	220 hrs.	0.81 (23.1)*	1.5 (5.2)*
Over 360 (225)	2200 hrs.	1100 hrs.	220 hrs.	2.12 (60.0)*	4.1 (13.4)*

*The grease outlet plug **MUST** be removed before adding new grease.

Procedure

CAUTION:

TO AVOID DAMAGE TO MOTOR BEARINGS, GREASE MUST BE KEPT FREE OF DIRT. FOR AN EXTREMELY DIRTY ENVIRONMENT, CONTACT YOUR BALDOR DISTRIBUTOR OR AN AUTHORIZED BALDOR SERVICE CENTER FOR ADDITIONAL INFORMATION.

1. Clean all grease fittings. If the motor does not have grease fittings, the bearing is sealed and cannot be greased externally.
2. If the motor is equipped with a grease outlet plug, remove it. This will allow the old grease to be displaced by the new grease.
3. If the motor is stopped, add the recommended amount of grease. If the motor is to be greased while running, a slightly greater quantity of grease will have to be added.

   NOTE: If new grease does not appear at the shaft hole or grease outlet plug, the outlet passage may be blocked. At the next service interval the bearings must be repacked.

   Add grease SLOWLY until new grease appears at the shaft hole in the endplate or grease outlet plug. Never add more than 1-1/2 times the amount of grease shown in the lubrication schedule.
4. For motors equipped with a grease outlet plug, let the motor run for 20 minutes before replacing the plug.

Preventative Maintenance

At regular intervals depending on the conditions and time of operation, the following checks should be made:

1. Pump meets required performance and is operating smoothly and quietly.
2. There are no leaks, particularly at the shaft seal.
3. The motor is not overheating.
4. Remove and clean all strainers or filters in the system.
5. Verify the tripping of the motor overload protection.
6. Check the operation of all controls. Check unit control cycling twice and adjust, if necessary.
7. If the pump is not operated for unusually long periods, the unit should be maintained in accordance with these instructions. In addition, if the pump is not drained, the pump shaft should be manually rotated or run for short periods of time at monthly intervals.
8. To extend the pump life in severe duty applications, consider performing one of the following actions:
   - Drain the pump after each use.
   - Flush the pump , through system, with water or other fluid that is compatible with the pump materials and process liquid.
   - Disassemble the pump liquid components and thoroughly rinse or wash them with water or other fluid dthat is compatible with the pump materials and process liquid.

   If the pump fails to operate or there is a loss of performance, refer to the Troubleshooting Section on pages 13-14.

Motor Replacement

If the motor is damaged due to bearing failure, burning or electrical failure, the following instructions detail how to remove the motor for replacement. It must be emphasized that motors used on CR pumps are specifically selected to our rigid specifications. Replacement motors must be of the same frame size, should be equipped with the same or better bearings and have the same service factor. Failure to follow these recommendations may result in premature motor failure.

Figure 6

CR(X)(N)(T) 8, 16 & CRT 2, 4

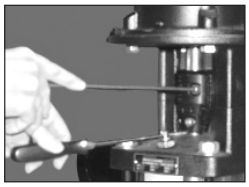

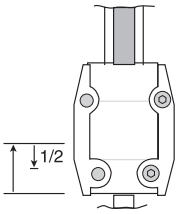

- Note the clearance below the coupling
- Raise the coupling higher, as far as it will go.
- Lower it halfway back down (1/2 the distance you just raised it).
- Tighten screws (see torque specifications below)

Disassembly

1. Turn off and lock out power supply. The power supply wiring can not be safely disconnected from the motor wires.
2. Remove the coupling guards.
3. Using the proper metric Allen wrench, loosen the four cap screws in the coupling. Completely remove coupling halves. On CR1s-CR20, the shaft pin can be left in the pump shaft. CR(N)32, 45, 64 and 90 do not have a shaft pin.

   CR 1s, 1, 3, 5, 10, 15, and 20: do not loosen the three shaft seal securing allen screws.
4. With the correct size wrench, loosen and remove the four bolts which hold the motor to the pump end.
5. Lift the motor straight up until the shaft has cleared the motor stool.

Assembly

1. Remove key from motor shaft, if present, and discard.
2. Thoroughly clean the surfaces of the motor and pump end mounting flange. The motor and shaft must be clean of all oil/grease and other contaminants where the coupling attaches. Set the motor on the pump end.
3. Place the terminal box in the desired position by rotating the motor.
4. Insert the mounting bolts, then diagonally and evenly tighten. For 3/8" bolts, torque to 17 ft.-lbs., for 1/2" bolts torque to 30 ft.-lbs., and for 5/8" bolts torque to 59 ft.-lbs.
5. **CR 1s, 1, 3, and 5:**
   Insert shaft pin into shaft hole. Reinstall the coupling halves onto shaft and shaft pin. Reinstall the coupling screws and leave loose. Check that the gaps on either side of the coupling are even, and that the motor shaft keyway is centered in the coupling half, as shown in Figure 6a, page 11. Tighten the screws to the correct torque.

   CR 10, 15 and 20:

   Insert shaft pin into shaft hole. Insert plastic shaft seal spacer beneath shaft seal collar. Reinstall the coupling halves onto shaft and shaft pin. Reinstall the coupling screws and leave loose. Check that the gaps on either side of the coupling are even and that the motor shaft key way is centered in the coupling half, as shown in Figure 6a, page 11. Tighten the screws to the correct torque. Remove plastic shaft seal spacer and hang it on inside of coupling guard.

   CR 2, 4, 8 and 16:

   Reinstall coupling halves. Make sure the shaft pin is located in the pump shaft. Put the cap screws loosely back into the coupling halves. Using a large screwdriver, raise the pump shaft by placing the tip of the screwdriver under the coupling and carefully elevating the coupling to its highest point (see Figure 6). Note: the shaft can only be raised approximately 0.20 inches (5mm). Now lower the shaft halfway back down the distance you just raised it and tighten the coupling screws (finger tight) while keeping the coupling separation equal on both sides. When the screws are tight enough to keep the couplings in place, then torque the screws evenly in a criss-cross pattern.

CR(N) 32, 45, 64 & CR90:

Place the plastic adjustment fork under the cartridge seal collar (see Figure 7).

Fit the coupling on the shaft so that the top of the pump shaft is flush with the bottom of the clearance chamber in the coupling (see Figure 8).

Lubricate the coupling screws with an anti-seize and lubricating compound. Tighten the coupling screws (finger tight) while keeping the coupling separation equal on both sides and the motor shaft keyway centered in the coupling half as shown in Figure 6a. When the screws are tight enough to keep the couplings in place, then torque the screws evenly in a crisscross pattern.

Torque coupling screws to 62 ft.-lbs. Remove the adjustment fork from under the cartridge seal collar and replace it to the storage location (see Figure 9).

6. Check to see that the gaps between the coupling halves are equal. Loosen and readjust, if necessary.
7. Be certain the pump shaft can be rotated by hand. If the shaft cannot be rotated or it binds, disassemble and check for misalignment.
8. Prime the pump.
9. Follow the wiring diagram on the motor label for the correct motor wiring combination which matches your supply voltage. Once this has been confirmed, reconnect the power supply wiring to the motor.
10. Check the direction of rotation, by bump-starting the motor. Rotation must be left to right (counter-clockwise) when looking directly at the coupling.
11. Shut off the power, then re-install the coupling guards. After the coupling guards have been installed the power can be turned back on.

Torque Specifications
CR(I)(N) 1s, 1, 3, 5, 10, 15, and 20
CR(N)(X)(T) 2, 4, 8, and 16

Coupling Bolt Size	Min. Torque Specifications
M6	10 ft-lbs.
M8	23 ft-lbs.
M10	46 ft-lbs.

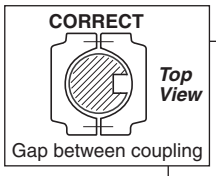

Figure 6a
All CR(I)(N)(X)(T)

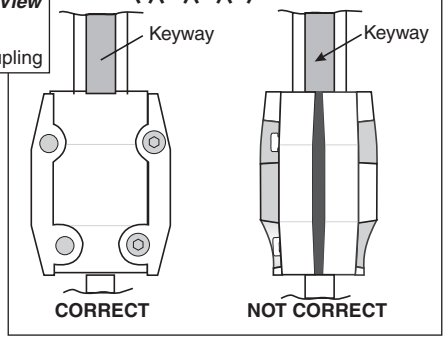

Figure 7
CR(N) 32, 45, 64, 90

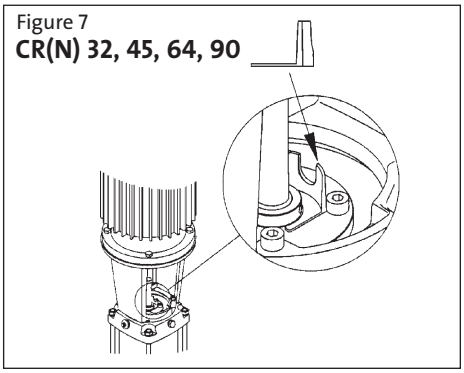

Figure 8

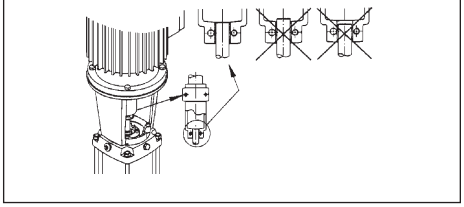

NOTE: To avoid damaging the coupling halves, ensure that no portion of the keyway on the motor shaft lies within the gap between the two coupling halves.

Figure 9

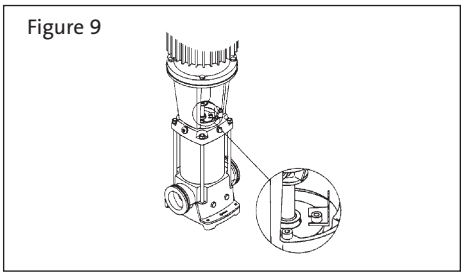

Parts List

For each CR pump model Grundfos offers an extensive **Parts List** and diagram of part used in that pump and is recommended to have on hand for future maintenance. In addition, the listings also provide information about prepackaged **Service Kits** for those pump components most likely to exhibit wear over time, as well as the complete Impeller Stack needed to replace the "guts" of each model. These Parts Lists are available separately from the Grundfos literature warehouse or as a set with extensive service instructions in the Grundfos CR **Service Manuals** (for a small charge).

Left, prepackaged impeller stacks ready for immediate installation; right, prepackaged flange kits.

Spare Parts

Grundfos offers an extensive list of spare parts. For a current list of these parts, refer to: "All Product Spare Parts/Service Kits" Price List, Form # L-SK-SL-002.

INSTRUCTION MANUAL

IM228R03

Model e-SV

INSTALLATION, OPERATION AND MAINTENANCE INSTRUCTIONS

GOULDS
WATER TECHNOLOGY
a xylem brand

Table of Contents

Owner's Information

Pump Model Number: _____

Pump Serial Number: _____

Control Model Number: _____

Dealer: _____

Dealer Phone No.: _____

Date of Purchase: _____ Installation: _____

Current Readings at Startup:

1 Ø		3 Ø	L1-2	L2-3	L3-1
Amps:	_____	Amps:	_____	_____	_____
Volts:	_____	Volts:	_____	_____	_____

e-SV Product Line
Numbering System for 1 – 22SV Liquid End Only

The various versions of the e-SV line are identified by a product code number on the pump label. This number is also the catalog number for the pump. The meaning of each digit in the product code number is shown below.
Note: Not all combinations are possible.

Example Product Code

22 SV 0 2 F E 3 0 _ _

Special Configurations (optional Characters)

A = Jacketed Seal only
B = Jacketed Seal + Passivation
C = Jacketed Seal + Low NPSH
E = Electro-Polished
F = Destaged - 1 stage
G = Destaged - 2 stage
H = Horizontal mount only
J = Horizontal mount + Passivation
K = Horizontal mount + Low NPSH
L = Horizontal mount + High Pressure
M = i-Alert (standard for 10 HP units and greater)
N = Low NPSH only
P = Passivation only
Z = High pressure only

Seal Material

0 = Carb-SilCar-Viton (Standard)
1 = Carb-SilCar-AFLAS (HighTemp)
2 = SilCar-SilCar-Viton
4 = SilCar-SilCar-EPR
6 = Carb-SilCar-EPR

Pole-Hz-Phase

1 = 2–50	3 = 2–60
2 = 4–50	4 = 4–60

Motor Frame (NEMA)

A = 56C	E = 280TC
B = 180TC	F = 320TSC
C = 210TC	G = 360TSC
D = 250TC	H = 140TC

Configuration

			Top / Bottom
C = Clamp-316	P = Victaulic-316	R =	(SVC) 12Suct-12Disch
F = Round-304 (SVB)	T = Oval-304 (SVA)	W =	(SVC) 12Suct-03Disch
G = CI-304		X =	(SVC) 12Suct-06Disch
N = Round-316 (SVD)		Y =	(SVC) 12Suct-09Disch

Suction discharge location

Total Number of Impeller Stages (may be 1 or 2 characters)

Product Line:

SV – Stainless Vertical

Nominal Flow:

1 = 5 GPM	10 = 53 GPM
3 = 16 GPM	15 = 80 GPM
5 = 26 GPM	22 = 116 GPM

e-SV Product Line
Numbering System for 33 – 125SV Liquid End Only

The various versions of the e-SV line are identified by a product code number on the pump label. This number is also the catalog number for the pump. The meaning of each digit in the product code number is shown below.
Note: Not all combinations are possible.

Example Product Code

125 SV 8 1 2 B F E 2 0 _ _

Special Configurations (optional Characters)
- E = Electro-Polished
- F = Destaged - 1 stage
- G = Destaged - 2 stage
- H = Horizontal mount only
- J = Horizontal mount + Passivation
- K = Horizontal mount + Low NPSH (33, 46, and 66 only)
- L = Horizontal mount + High Pressure
- M = i-Alert (standard for 10 HP units and greater)
- N = Low NPSH only (33, 46, and 66 only)
- P = Passivation only
- Z = High pressure (250/300# pump body)

Seal Material
- 0 = Carb-SilCar-Viton
- 2 = SilCar-SilCar-Viton
- 4 = SilCar-SilCar-EPR
- 6 = Carb-SilCar-EPR
- 7 = Carb-SilCar-Viton (Cart)
- 8 = SilCar-SilCar-EPR (Cart)

Pole-Hz-Phase
- 1 = 2–50
- 2 = 4–50
- 3 = 2–60
- 4 = 4–60

Motor Frame (NEMA)
- A = 56C
- B = 180TC
- C = 210TC
- D = 250TC
- E = 280TC
- F = 320TSC
- G = 360TSC
- H = 140TC

Configuration
- G = Round-CI-304
- N = Round-316

125SV ONLY

Reduced Trim Diameter A = 141 mm B = 136 mm C = 145 mm (full dia.)
Blank if 33-92SV

Number of Reduced Trim Impellers (0, 1, 2)

Total Number of Impellers/Stages

Product Line: SV – Stainless Vertical

Nominal Flow:
- 33 = 175 GPM
- 46 = 240 GPM
- 66 = 350 GPM
- 92 = 485 GPM
- 125 = 660 GPM

e-SV Product Line
Numbering System for 1 – 22SV Pump & Motor Combination

The various versions of the e-SV line are identified by a product code number on the pump label. This number is also the catalog number for the pump. The meaning of each digit in the product code number is shown below.
Note: Not all combinations are possible.

Example Product Code

2 SV 2 2 F A 2 F 5 1 A H

Special Configurations (1 or 2 Characters)

A = Jacketed Seal only
B = Jacketed Seal + Passivation
C = Jacketed Seal + Low NPSH
E = Electro-Polished
F = Destaged - 1 stage
G = Destaged - 2 stage
H = Horizontal mount only
J = Horizontal mount + Passivation
K = Horizontal mount + Low NPSH
L = Horizontal mount + High Pressure
M = i-Alert (standard for 10 HP units and greater)
N = Low NPSH only
P = Passivation only
Z = High Press (250/300# pump body)

Seal Material

0 = Carb-SilCar-Viton
1 = Carb-SilCar-AFLAS (HighTemp)
2 = SilCar-SilCar-Viton
4 = SilCar-SilCar-EPR
6 = Carb-SilCar-EPR

Motor Enclosure

1 = ODP
2 = TEFC
3 = X-Proof
4 = WD - Tropical
5 = Prem-ODP
6 = Prem-TEFC
7 = Prem-XP
8 = Prem-WD
9 = Marine
A = Chem
B = Prem-Chem

Voltage

A = 115-230
B = 230
C = 230-460
D = 460
E = 575
F = 208-230/460
G = 200
H = 190/380
J = 115/208-230
K = 208
L = 208-230
M = 190/380/415
N = 380
P = 110/220
R = 220
S = 415
T = 220/380 WYE
U = 380-660 WYE
V = 208-230/460 WYE

Pole-Hz-Phase

1 = 2-50-1
2 = 2-50-3
3 = 2-60-1
4 = 2-60-3
5 = 4-50-1
6 = 4-50-3
7 = 4-60-1
8 = 4-60-3

HP Rating

A = 0.50
B = 0.75
C = 1.00
D = 1.50
E = 2
F = 3
G = 5
H = 7.5
J = 10
K = 15
L = 20
M = 25
N = 30
P = 40

Configuration OPTION

C = Clamp-316
F = Round-304 (SVB)
G = CI-304
N = Round-316 (SVD)
P = Victaulic-316
T = Oval-304 (SVA)

Top / Bottom

R =	(SVC) 12Suct-12Disch
W =	(SVC) 12Suct-03Disch
X =	(SVC) 12Suct-06Disch
Y =	(SVC) 12Suct-09Disch

Suction discharge location

Total Number of Impeller Stages (may be 1 or 2 characters)

Product Line:

SV – Stainless Vertical

Nominal Flow:

1 = 5 GPM
3 = 16 GPM
5 = 26 GPM
10 = 53 GPM
15 = 80 GPM
22 = 116 GPM

e-SV Product Line
Numbering System for 33 – 125SV Pump & Motor Combination

The various versions of the e-SV line are identified by a product code number on the pump label. This number is also the catalog number for the pump. The meaning of each digit in the product code number is shown below.
Note: Not all combinations are possible.

Example Product Code

125 SV 8 2 A G K 3 F 2 0 _ _

Special Configurations (1 or 2 Characters)

E = Electro-Polished
F = Destaged - 1 stage
G = Destaged - 2 stage
H = Horizontal mount only
J = Horizontal mount + Passivation
K = Horizontal mount + Low NPSH
L = Horizontal mount + High Pressure
M = i-Alert (standard for 10 HP units and greater)
N = Low NPSH only (33, 46 and 66 only)
P = Passivation only
Z = High Press (250/300# pump body/Casing)

Seal Material

0 = Carb-SilCar-Viton
2 = SilCar-SilCar-Viton
4 = SilCar-SilCar-EPR
6 = Carb-SilCar-EPR
7 = Carb-SilCar-Viton (Cart)
8 = SilCar-SilCar-EPR (Cart)

Motor Enclosure

1 = ODP
2 = TEFC
3 = X-Proof
4 = WD - Tropical
5 = Prem-ODP
6 = Prem-TEFC
7 = Prem-XP
8 = Prem-WD
9 = Marine
A = Chem
B = Prem-Chem

Voltage

A = 115-230
B = 230
C = 230-460
D = 460
E = 575
F = 208-230/460
G = 200
H = 190/380
J = 115/208-230
K = 208
L = 208-230
M = 190/380/415
N = 380
P = 110/220
R = 220
S = 415
T = 220/380 WYE
U = 380-660 WYE
V = 208-230/460 WYE

Pole-Hz-Phase

1 = 2-50-1
2 = 2-50-3
3 = 2-60-1
4 = 2-60-3
5 = 4-50-1
6 = 4-50-3
7 = 4-60-1
8 = 4-60-3

HP Rating

A = 0.50
B = 0.75
C = 1.00
D = 1.50
E = 2
F = 3
G = 5
H = 7.5
J = 10
K = 15
L = 20
M = 25
N = 30
P = 40
R = 50
S = 60
T = 75

Configuration

G = Round-CI-304
N = Round-316

125SV ONLY

Reduced Trim Diameter
Blank if 33-92SV
A = 141 mm
B = 136 mm
C = 145 mm (full dia.)

Number of Reduced Trin Impeller (0, 1, 2)

Total Number of Impeller Stages (may be 1 or 2 characters)

Product Line:

SV – Stainless Vertical

Nominal Flow:

33 = 175 GPM
46 = 240 GPM
66 = 350 GPM
92 = 485 GPM
125 = 660 GPM

SAFETY INSTRUCTIONS

TO AVOID SERIOUS OR FATAL PERSONAL INJURY OR MAJOR PROPERTY DAMAGE, READ AND FOLLOW ALL SAFETY INSTRUCTIONS IN MANUAL AND ON PUMP.

THIS MANUAL IS INTENDED TO ASSIST IN THE INSTALLATION AND OPERATION OF THIS UNIT AND MUST BE KEPT WITH THE PUMP.

This is a **SAFETY ALERT SYMBOL.** When you see this symbol on the pump or in the manual, look for one of the following signal words and be alert to the potential for personal injury or property damage.

DANGER Warns of hazards that **WILL** cause serious personal injury, death or major property damage.

WARNING Warns of hazards that **CAN** cause serious personal injury, death or major property damage.

CAUTION Warns of hazards that **CAN** cause personal injury or property damage.

NOTICE: INDICATES SPECIAL INSTRUCTIONS WHICH ARE VERY IMPORTANT AND MUST BE FOLLOWED.

THOROUGHLY REVIEW ALL INSTRUCTIONS AND WARNINGS PRIOR TO PERFORMING ANY WORK ON THIS PUMP.

MAINTAIN ALL SAFETY DECALS.

WARNING

Hazardous fluids can cause fire, burns or death.

UNIT NOT DESIGNED FOR USE WITH HAZARDOUS LIQUIDS OR FLAMMABLE GASES. THESE FLUIDS MAY BE PRESENT IN CONTAINMENT AREAS.

OVERVIEW

The purpose of this manual is to provide the necessary information for proper installation, operation and maintenance of the e-SV pump. The instructions and warnings provided below concern the standard version, as described in the sale documents. Special versions may be supplied with supplementary instructions leaflets. Please refer to the sale contract for any modifications or special version characteristics. Always specify the exact pump type and identification code when requesting technical information or spare parts from our Sales and Service department. For instructions, situations or events not considered in this manual or in the sale documents, please contact your distributor.

Read this manual before installing and using the product.

Improper use may cause personal injury and damage to property and lead to the forfeiture of the warranty coverage.

PRODUCT DESCRIPTION

The e-SV pump is a vertical multistage, non-self priming pump which can be coupled to standard electric motors. For the pump sizes 1SV-22SV, some of the metal parts that are in contact with the pumped liquid are made of stainless steel, others are made of cast iron. They are available in different versions according to the position of the suction and delivery ports and the shape of the connection flanges. For the sizes 33SV-125SV, some of the metal parts in contact with the pumped liquid are made of stainless steel, others are made of cast iron. A special version is available, in which all the metal parts in contact with the pumped liquid are made of stainless steel. If you purchase a pump without the electric motor, make sure that the motor you use is suitable for coupling to the pump. All e-SV pumps are equipped with a special mechanical seal designed for easy replacement without having to disassemble the entire pump.

APPLICATIONS

These pumps are suitable for civil and industrial water distribution systems, pressure booster, irrigation (agriculture, sporting facilities), water treatment, boiler feed, parts washing, cooling - air conditioning - refrigeration and fire fighting applications.

1. NAMEPLATE

Do not use this pump/electric pump unit to handle flammable and/or explosive liquids.

WARNING Do not use this pump to handle liquids containing abrasive, solid or fibrous substances.

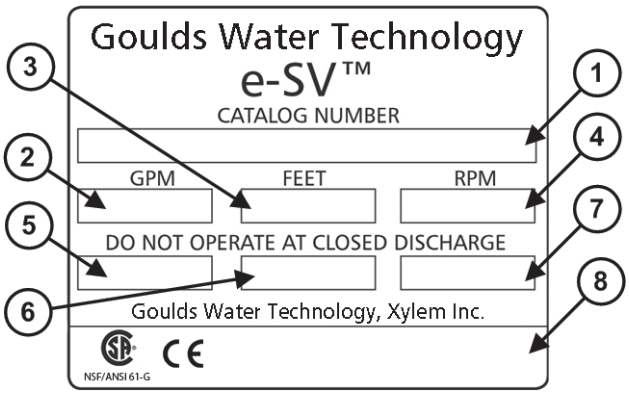

1	Goulds Water Technology Catalog Number
2	Capacity Range
3	TDH Range
4	Rated Speed
5	Rated Horsepower
6	Maximum Operating Pressure
7	Maximum Operating Temperature
8	Pump Serial Number

PRE-INSTALLATION CHECKS

Confirm that the pump is capable of meeting the desired operating conditions.

1. MINIMUM INLET (SUCTION) PRESSURE

In general, the minimum suction pressure required is that which provides adequate $NPSH_A$ necessary to feed the pump. The required NPSHr, expressed in feet, can be found on the performance curve for the pump at the specific duty point. It is recommended that the $NPSH_A$ exceeds the NPSHr by a minimum of (2) two feet as a safety margin and to insure long term reliable performance of your e-SV pump.

$$P_{S_{MIN}} = NPSHr + 2 \text{ ft.}$$

NOTE: THE $NPSH_A$ MUST BE CALCULATED FOR THE SPECIFIC SYSTEM TO WHICH THE e-SV PUMP IS TO BE INSTALLED. PLEASE CONTACT YOUR DEALER/DISTRIBUTOR IF YOU REQUIRE ASSISTANCE.

2. SUCTION

In theory, a pump could suck water from a source located 10.33 meters lower than the pump's own installation level, but this does not happen because the pump offers its own intrinsic flow resistance, moreover the suction capacity is reduced as a result of flow resistance in the piping, height difference, liquid temperature and elevation above sea level.

A wrong choice in the altimetric placement of the pump could lead to cavitation.

With reference to Figure below and given Z as the maximum height the pump can be installed to, with reference to the level of the liquid source it can be stated the following:

In SI Units:

$Z = P_b \bullet 10{,}2 - NPSH - H_f - H_v - 0{,}5$ [m]

P_b = Barometric pressure [bar] (absolute)

$NPSH_r$ = NPSH required by pump [m]

H_f = Losses [m] in suction piping

H_v = Vapor pressure [m] at application temp [C]

1,5 = 1,5 [m] safety factor

In English Units:

$Z = P_b - NPSH_r - H_f - H_v - 1.5$

P_b = Barometric pressure [ft] (absolute)

$NPSH_r$ = NPSH required by pump [ft]

H_f = Losses [ft] in suction piping

H_v = Vapor pressure [ft] at application temp [F]

1.5 = 1.5 [ft] safety factor

With meanings given in the above table it can be stated that:
If $Z \geq 0$ pump can work with a maximum suction height equal to Z.

If $Z < 0$ pump must be provided of an inlet pressure equal to –Z.

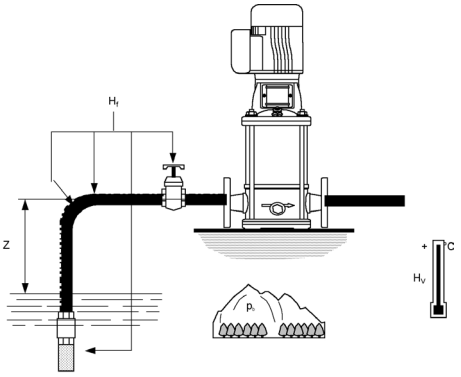

Temp		Hv	
C	F	m	ft
20	68	0.23	0.75
30	86	0.43	1.41
40	104	0.75	2.46
50	122	1.26	4.13
60	140	2.03	6.66
70	158	3.18	10.43
80	176	4.83	15.84
90	194	7.15	23.45
100	212	10.34	33.92
110	230	14.61	47.92
120	248	20.27	66.49

⚠ WARNING Do not use the pump if cavitation occurs, as its internal components could be damaged.

⚠ WARNING If hot water is pumped, guarantee an appropriate condition on the suction side to prevent cavitation.

⚠ WARNING Make sure that the sum of the pressure on the suction side (water system, gravity tank) and the maximum pressure delivered by the pump does not exceed the maximum working pressure allowed (nominal pressure PN) for the pump.

3. MAXIMUM INLET PRESSURE, 60 HZ

$p_{1max} \leq PN - pmax$

Having the following meaning of the symbols:

p_{max} = Maximum pressure delivered by the pump

p_{1max} = Maximum inlet pressure

PN = Maximum operating pressure

If a motor with an axially locked shaft (standard) is used, be sure that the above formula is fulfilled, if not please contact the Sales and Service Department.

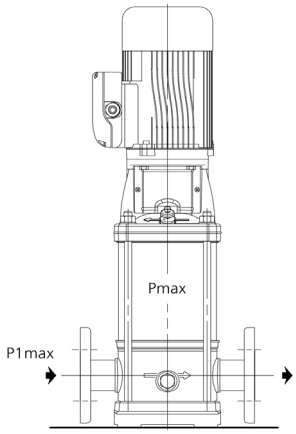

The following table shows the maximum permissible inlet pressure. However, the actual inlet pressure + pressure against a closed valve must always be lower than the maximum permissible operating pressure.

Pump	Stages	P_{1max} (psig)
1SV	2-5 6-10 11-30	145 218 PN-Pmax
3SV	2-3 4-7 8-30	145 218 PN-Pmax
5SV	2-3 4-6 7-27	145 290 PN-Pmax
10SV	1-2 3-5 6-20	145 290 PN-Pmax
15SV	1-2 3 4-15	145 290 PN-Pmax
22SV	1-2 3 4-12	145 290 PN-Pmax

Pump	Stages	P_{1max} (psig)
33SV	1/1-2/2 2/1-5/2 5/1-7/2 7/1-10	45 145 218 PN-Pmax
46SV	1/1-1 2/2-2 3/2-4/1 4-10/2	145 218 290 PN-Pmax
66SV	1/1-3/2 3/1-4/1 4-5/1 5-6	72 145 218 PN-Pmax
92SV	1/1-2/2 2/1-3/2 3/1-3 4/2-5/1	72 145 218 PN-Pmax
125SV	1-3/3B 3-5/5A	290 PN-Pmax

4. MAXIMUM OPERATING PRESSURE

(staging at 3500 RPM)

Pump	Stages	PSI / Bar
1SV	1-29	362 / 25
	30	580 / 40
3SV	1-23	362 / 25
	24-30	580 / 40
5SV	1-23	362 / 25
	24-27	580 / 40
10SV	1-14	362 / 25
	15-20	580 / 40
15SV	1-11	362 / 25
	12-15	580 / 40
22SV	1-11	362 / 25
	12	580 / 40
33SV	1-6	362 / 25
	7-10	580 / 40
46SV	1-5	362 / 25
	6-10	580 / 40
66SV	1-5	362 / 25
	6	580 / 40
92SV	1-5	362 / 25
125SV	1-6	362 / 25

NOTE: Oval flange (1-22SV) maximum working pressure is 232 psi (16 bar).

5. TEMPERATURE CAPABILITY

The e-SV pump is capable of pumping liquids within the below temperature range:

Standard Seal
1SV-22SV -22°F to 250°F (-30°C to 120°C)
33SV-125SV -22°F to 250°F (-30°C to 120°C)
High Temperature Seal
1SV-22SV -22°F to 340°F (-30°C to 171°C)
33SV-125SV N/A

NOTE: In order to provide adequate cooling for the electric motor, the ambient temperature must be 32° F to 104° F and the relative humidity at 104° F must not exceed 50%.

For temperatures above 104° F and for installations sites located at elevation in excess at 3000 feet above sea level it may be necessary to derate the motor performance. Please contact your distributor/dealer for assistance.

6. MINIMUM NOMINAL FLOW RATE

To prevent overheating of the internal pump components, make sure that a minimum water flow is always guaranteed when the pump is running.

For continuous operation the minimum flow rate recommended is specified below.

Pump Size	Minimum Flow GPM			
	3500 RPM	1750 RPM	2900 RPM	1450 RPM
1SV	2	1	2	1
3SV	3	2	3	2
5SV	7	4	6	3
10SV	9	5	8	4
15SV	18	9	15	7
22SV	21	11	18	9
33SV	35	18	8	4
46SV	40	20	10	5
66SV	70	35	14	7
92SV	100	50	20	10
125SV	128	64	106	53

NOTE: If this cannot be achieved, then a bypass/recirculate line is recommended.

⚠ WARNING **Do not run the pump against a closed discharge for longer than a few seconds.**

7. NUMBER OF STARTS PER HOUR

For electric pumps coupled to motors supplied by Goulds Water Technology, the maximum number of work cycles (starts and stops) in one hour are as follows:

HP	Max. Starts Per Hour*	Min. Run Time Between Starts (sec)
0.5	24	120
0.75	24	120
1	15	75
1.5	13	76
2	12	77
3	9	30
5	8	83
7.5	7	88
10	6	92
15	5	100
20	5	110
25	5	115
30	4	120
40	4	130
50	3	145
60	3	170
75	3	180

** For more details, refer to technical manual.*

⚠ WARNING **If you use a different motor from the standard one supplied by Goulds Water Technology, please consult with the motor manufacturer to find out the maximum number of work cycles allowed.**

8. POWER SUPPLY REQUIREMENTS

⚠ WARNING **Make sure that the supply voltages and frequencies are suited to the characteristics of the electric motor. Check the motor rating plate.**

In general, the supply voltage tolerances for motor operation are as follows:

Hz	Phase	U_N	
		V	±%
60	1	230	10
60	3	230 / 460	10
60	3	460	10

TRANSPORTATION AND STORAGE

1. TRANSPORTATION AND HANDLING OF PACKED PRODUCT

⚠ WARNING The e-SV pump is packed in cartons or wooden crates having different dimensions and shapes.

Some cartons (the supporting base is made of wood) are designed to be transported and handled in the vertical position. Other cartons, as well as the wooden crates, are designed to be transported and handled in the horizontal position. Protect the product against humidity, heat sources and mechanical damage (collisions, falls, ...). Do not place heavy weights on the cartons.

Lift and handle the product carefully, using suitable lifting equipment. Observe all the accident prevention regulations.

When you receive the pump, check the outside of the package for evident signs of damage. If the product bears visible signs of damage, notify our distributor within 8 days from the delivery date.

2. STORING THE PACKED PRODUCT

Ambient temperature 32º F to 104º F.

Short Term: (Less than 6 months) Goulds Water Technology normal packaging procedure is designed to protect the pump during shipping. Upon receipt, store in a covered and dry location.

Long Term: (More than 6 months) Rotate shaft several times every 3 months. Refer to driver and coupling manufacturers for their long term storage procedures. Store in a covered dry location.

3. UNPACKING THE PRODUCT

Use suitable equipment. Observe all the accident prevention regulations in force. Lift and handle the product carefully, using suitable lifting equipment.

When you receive the pump, check the outside of the package for evident signs of damage. If the product bears visible signs of damage, notify our distributor within 8 days from the delivery date.

4. HANDLING THE PRODUCT

Lift and handle the product carefully, using suitable lifting equipment. Observe the accident prevention regulations in force.

The product must be securely harnessed for lifting and handling. Some electric pumps have eyebolts that can be used for this purpose.

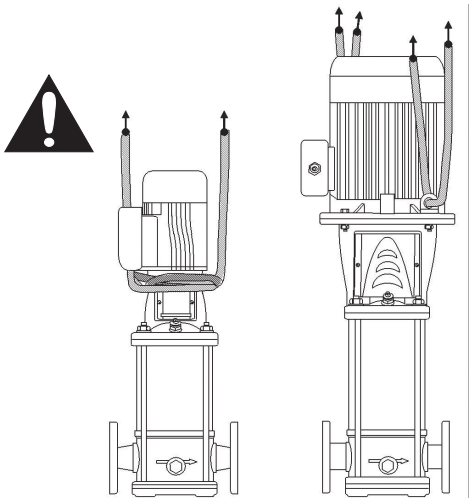

INSTALLATION

The installation operations must be carried out by qualified and experienced personnel. Use suitable equipment and protections. Observe the accident prevention regulations in force.

Always refer to the local and/or national regulations, legislation and codes in force relating to the selection of the installation site and the water and power connections.

1. SITE SELECTION

Make sure that no obstructions or obstacles hinder the normal flow of the cooling air delivered by the motor fan. Make sure there is adequate clearance around the pump for the maintenance operations. Whenever possible, raise the pump slightly from the level of the floor. See the figures below and at the top of the next column for possible installation configurations. Horizontal operation requires special mounting with a horizontally configured pump.

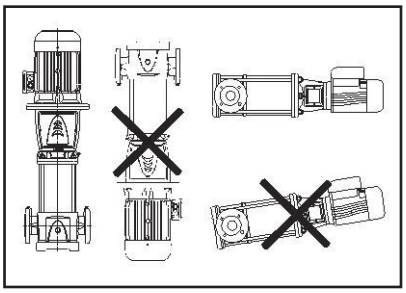

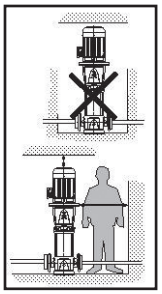

2. ANCHORING

The pump must be anchored securely with bolts to a concrete foundation or equivalent metal structure (shelf or platform). If the pump is large-sized and needs to be installed near rooms inhabited by people, suitable vibration-damping supports should be provided to prevent the transmission of the vibrations from the pump to the reinforced concrete structure. The dimensions of the pump base and anchoring holes are shown.

	1SV-5SV	10SV-22SV	33SV	46SV-92SV	125SV
	in (mm)				
L1	3.94 (100)	5.12 (130)	6.69 (170)	7.48 (190)	10.83 (275)
L2	7.09 (180)	8.46 (215)	9.45 (240)	10.43 (265)	14.96 (380)
L3	5.91 (150)	7.28 (185)	8.66 (220)	9.45 (240)	12.99 (330)
L4	8.27 (210)	9.65 (245)	11.42 (290)	12.4 (315)	17.72 (450)
Ø A	0.51 (13)		0.59 (15)		0.75 (19)
N	0.16(4)				

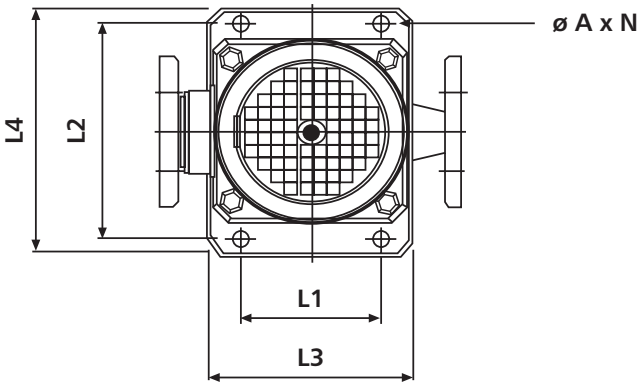

3. FLANGE ALIGNMENT AND LOADING

Angular alignment of the suction and discharge flanges can best be accomplished using calipers at the bolt locations. See figure below.

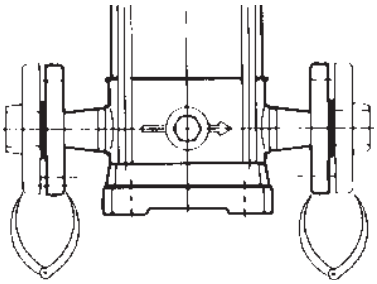

NOTICE: DO NOT DRAW PIPING INTO PLACE BY FORCING THE PUMP SUCTION OR DISCHARGE CONNECTIONS.

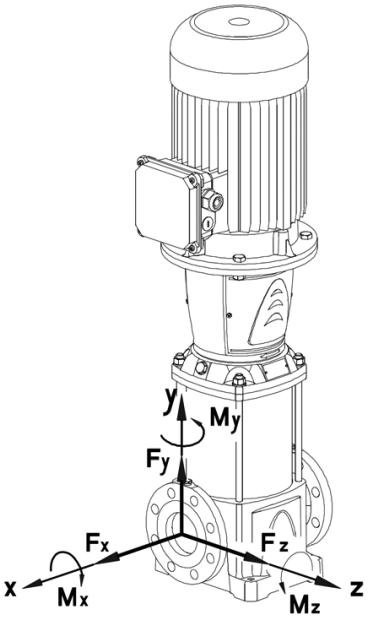

4. PIPING

Discharge and suction piping should be no smaller than the respective pump opening and should be kept as short as possible, avoiding unnecessary fittings to minimize friction losses.

NOTICE: PIPING MUST BE INDEPENDENTLY SUPPORTED AND NOT PLACE ANY PIPING LOADS ON THE PUMP.

If suction piping larger than pump suction is required, an eccentric pipe reducer, **WITH THE STRAIGHT SIDE UP**, must be installed at the pump suction.

If the pump is installed below the liquid source, install a full flow isolation valve in the suction piping for pump inspection or maintenance.

NOTICE: DO NOT USE THE ISOLATION VALVE ON THE SUCTION SIDE OF THE PUMP TO THROTTLE PUMP. THIS MAY CAUSE LOSS OF PRIME, EXCESSIVE TEMPERATURES, DAMAGE TO PUMP AND VOID WARRANTY.

If pump is installed above the liquid source, the following **MUST** be provided:

To avoid air pockets, no part of the suction piping should be above the pump suction.

On any horizontal piping sections, slope piping upward from liquid source.

All suction pipe joints **MUST** be airtight.

Use a foot valve for priming, or for holding prime during intermittent duty.

The suction strainer or suction bell **MUST** be at least 3 times the suction pipe diameter.

Insure that the size and minimum liquid submergence, over the suction inlet, is sufficient to prevent air from entering through a suction vortex. See typical suction piping Figures 1 through 4.

Install a discharge check valve, suitable to handle the flow and liquids, to prevent backflow.

Install an appropriately sized gate valve, **AFTER** the discharge valve, to regulate the pump capacity, for pump inspection and for maintenance.

When a pipe increaser is required, install between the check valve and the pump discharge.

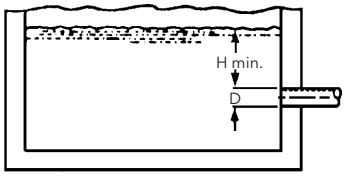

Figure 1

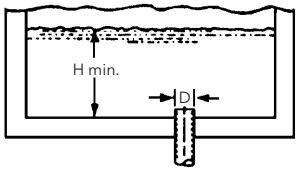

Figure 2

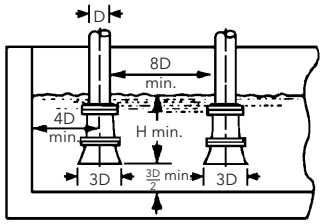

Figure 3

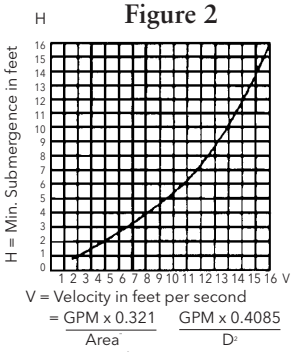

Figure 4

5. SHAFT ALIGNMENT – MOTOR TO PUMP

When the pump is purchased less motor, the pump will be supplied with a motor assembly shim positioned between the motor adapter and the coupling.

To assemble the motor to the pump remove the plastic shipping straps, the 2 stainless steel coupling guard halves, and the expanded polyurethane.

Insure that the motor assembly shim is properly positioned between the coupling and the motor adapter. If the motor assembly shim is not available, a 0.203" (5 mm) shim may be used to locate the pump shaft assembly and to set the correct height. See figures below.

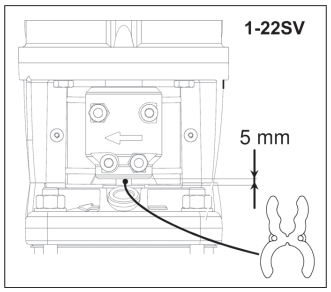

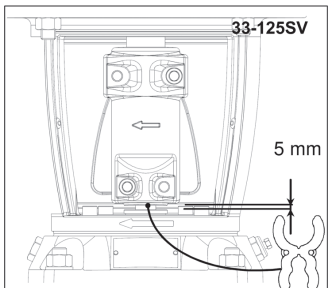

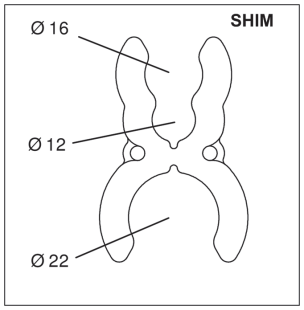

For 1-22SV pumps using motor frame sizes 213TC – 256TC, place adapter ring on top flange of motor adapter. For 33-125SV pumps using motor frame sizes 284TC – 286TC, motor frame sizes 213TC and larger, attach the motor adapter flange to the motor using 4 hex cap screws. Torque to values shown in the **"ENGINEERING DATA"** section of this manual.

Loosen the 4 coupling socket head screws enough to provide an adequate opening in the coupling to receive the motor shaft.

With an adequately sized crane, carefully lower the motor assembly onto the pump motor adapter and into the coupling. Secure the 4 motor hex cap screws, torquing to the value provided in the **"ENGINEERING DATA"** section of this manual.

Torque the 4 coupling socket head screws to the value provided in **"ENGINEERING DATA"** section of this manual. After assembly, the gap between the coupling halves should be equal.

For the 33 through 125SV sizes using a cartridge seal, after coupling bolts have been properly torqued, there are four set screws on the collar of the cartridge seal that require tightening before removing the shim. The four hex head set screws require a 1/8" allen wrench and are to be tightened hand-tight approximately 5 lbs.-ft. (7 N•m).

Remove the motor assembly shim and retain for future use.

Install the 2 coupling guard halves.

START-UP

1. WATER CONNECTION

The water connections must be made by qualified installation technicians in compliance with the regulations in force.

In case of connection to the water system, the regulations issued by the competent authorities (municipal, public utility company) must be observed. Authorities often require the installation of a backflow prevention device, such as a disconnector, check valve or disconnection tank.

2. WIRING AND GROUNDING

Install, ground and wire according to local and National Electrical Code requirements.

Install an all leg disconnect switch near pump.

Disconnect and lockout electrical power before installing or servicing pump.

Electrical supply **MUST** match pump's nameplate specifications. Incorrect voltage can cause fire, damage motor and voids warranty.

Motors equipped with automatic thermal protectors open the motor's electrical circuit when an overload exists. This can cause the pump to start unexpectedly and without warning.

Use only stranded copper wire to motor and ground. Wire size **MUST** limit the maximum voltage drop to 10% of the motor nameplate voltage, at the motor terminals. Excessive voltage drop will affect performance and void motor warranty. The ground wire must be at least as large as the wires to the motor. Wires should be color coded for ease of maintenance.

Three phase motors require all leg protection with properly sized magnetic starters and thermal overloads.

WARNING Hazardous voltage

PERMANENTLY GROUND THE PUMP, MOTOR AND CONTROLS PER NEC OR LOCAL CODES BEFORE CONNECTING TO ELECTRICAL POWER. FAILURE TO DO SO CAN CAUSE SHOCK, BURNS OR DEATH.

Connect the electrical leads to the motor, as follows:

Single Phase Motors – Connect the BLACK wire to the BLACK motor wire. Connect the WHITE wire to the WHITE motor wire. Connect the GREEN wire to the GREEN motor wire.

Three Phase Motors – See figure below.

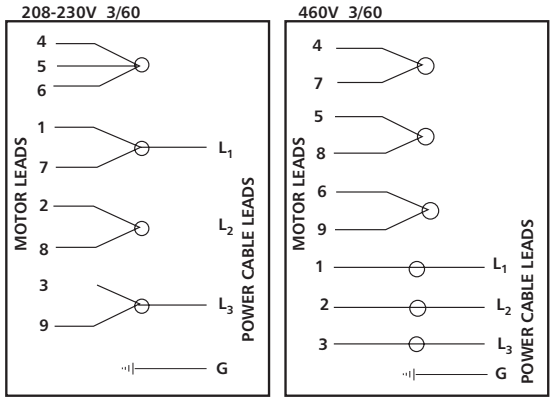

THREE PHASE MOTOR WIRING DIAGRAM

NOTICE: UNIT ROTATION IS DETERMINED WHEN VIEWED FROM MOTOR END. SEE PAGE 17 FOR MOTOR ROTATION DETAIL. INCORRECT ROTATION MAY CAUSE DAMAGE TO THE PUMP AND VOIDS WARRANTY.

Check pump rotation by observing the motor fan or the coupling **THROUGH** the coupling guard. **DO NOT** confuse the flow arrows, stamped on the pump body, with the rotation arrows on the coupling and motor adapter. Three phase motors only – If rotation is incorrect, have a qualified electrician interchange any two of the three power cable leads.

3. **PRIMING/VENTING**

For installations with the liquid level above the pump:

Close the discharge valve.

Remove the vent plug.

For models 1SV, 3SV and 5SV only, it is necessary to fully unscrew the pin located in the drain plug. See figures below.

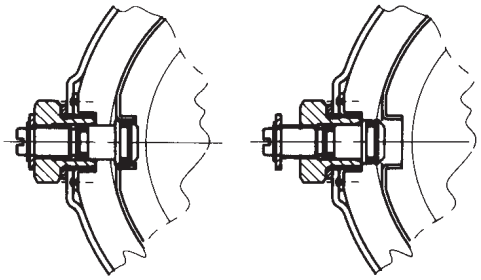

DRAIN PLUG WITH PIN CLOSED — DRAIN PLUG WITH PIN OPEN

For sizes 10SV-125SV the vent plug is supplied with an internal needle valve, so it is not necessary to remove the vent plug. Simply unscrew the needle valve half way to open the valve to allow air to escape. (For sizes 33SV-92SV, if the pump is supplied with a cartridge seal, remove the vent plug located on the gland plate beneath the coupling.)

Open the suction valve until liquid flows out of the vent plug opening.

NOTICE: DO NOT REMOVE AND REPLACE DRAIN PLUG WITH ANOTHER PLUG OR PIPING FIXTURE FROM ANY OTHER MANUFACTURER, OR SIGNIFICANT LOSS OF PUMP PERFORMANCE MAY OCCUR AS A RESULT.

NOTE: Place a loose rag over the open vent port to prevent large amounts of liquid from being sprayed on the pump and adjacent equipment.

Care should be exercised if you are pumping hot water or chemicals to avoid personal injury.

Install and torque the vent plug to the values provided in the **"ENGINEERING DATA"** section of this manual. Close the drain plug pin (1SV, 3SV and 5SV only) and open the discharge valve.

For installations with the liquid level below the pump:

Install foot valve at suction end.

For models 1SV, 3SV and 5SV only, it is necessary to fully unscrew the pin located in the drain plug. See figures above.

With the provided plastic funnel, completely fill the casing with liquid.

Install and torque the vent plug, close the drain plug pin (1SV, 3SV and 5SV only) and open the suction valve.

OPERATION

DO NOT OPERATE UNIT WITHOUT SAFETY GUARD IN PLACE. TO DO SO CAN CAUSE SEVERE PERSONAL INJURY.

NOTICE: PUMP MUST BE COMPLETELY PRIMED BEFORE OPERATION.

DO NOT OPERATE PUMP AT OR NEAR ZERO FLOW. TO DO SO CAN CAUSE EXTREME HEAT, DAMAGE TO THE PUMP, INJURY OR PROPERTY DAMAGE.

Start the pump, keeping the on-off valve downstream from the pump closed. Open the on-off valve gradually. The pump must run smoothly and noiselessly. If necessary, reprime the pump. Check the current absorbed by the motor and, if necessary, adjust the setting of the thermal relay. Any air pockets trapped inside the pump may be released by loosening the air screw for all e-SV pumps.

WARNING **If a pump installed in a location where freezing may occur remains inactive, you must drain it through the drain plugs. This operation is not necessary if a suitable antifreeze has been added to the water.**

Make sure that the drained liquid does not cause damage or injuries.

After stabilizing the system at normal operating conditions, check piping for correct alignments. If necessary, adjust pipe supports.

WARNING Hazardous machinery

HAZARDOUS MACHINERY. MOTOR THERMAL PROTECTORS CAN RESTART MOTOR UNEXPECTEDLY AND WITHOUT WARNING, CAUSING SEVERE PERSONAL INJURY.

See the **"ENGINEERING DATA"** section in this manual for the recommended maximum pump starts per hour.

MAINTENANCE

WARNING Hazardous voltage

DISCONNECT AND LOCKOUT ELECTRICAL POWER BEFORE ATTEMPTING ANY MAINTENANCE. FAILURE TO DO SO CAN CAUSE SHOCK, BURNS OR DEATH.

MOTOR LUBRICATION

Recommended Motor Bearing Lubrication Intervals

Interval	Service Environment
1 – 2 Years	Light Duty in Clean Atmosphere
1 Year	8 – 16 hours/day – Clean, Dry Atmosphere
6 Months	12 – 24 hours/day – Moisture Present
3 Months	12 – 24 hours/day – Dirty, High Moisture

When lubricants are operated at elevated temperatures, the lubrication frequency should be increased.

DO NOT intermix grease bases (lithium, sodium, etc.). Completely purge old grease if changing grease base.

Over greasing can cause excessive bearing temperatures, lubricant and bearing failure.

MECHANICAL SEAL REPLACEMENT

(e-SV 1–125)

1. Close all necessary suction and discharge valves to isolate the pump from the system.
2. Drain the liquid from the pump by removing the drain plug and opening the needle valve on the vent plug.
3. Remove the coupling guards, the 4 coupling hex cap screws, the coupling and coupling drive pin. See 1-3, Figure 5.
4. Remove the 4 motor hex cap screws (inner screws) on the seal housing. See step 4.
5. Remove the seal housing plate on 33-125SV models, using the two tapped holes provided. Threading 2 of the hex cap screws into these holes and evenly tightening the screws. Lift and remove the seal housing between the pump and motor shaft. Exercise care when sliding the seal housing between the shaft to prevent damage to the stationary seat. See step 5.
6. Turn the seal housing upside down and remove the stationary seat and o-ring. Remove and discard the large o-ring used to seal the seal housing to the pump head. Inspect the seal seat for any burrs or debris. Make sure that the seat is clean. Lubricate the new o-ring for the seal seat with a lubricant compatible with the o-ring and install the new seat by pressing it into the seal housing with your thumb. DO NOT USE EXCESSIVE FORCE and, if possible, place a clean soft cloth over the seal face to protect the seal faces during installation.
7. Remove the rotary portion at the mechanical seal by sliding the rotary unit axially upwards along the pump shaft. Inspect the pump shaft for any burns or debris. Any burrs should be ground smooth with (fine grit) emery paper. See step 7 in Figure 5.
8. Lubricate the o-ring located in the ID of the rotary unit of the mechanical seal with a lubricant compatible with the seal elastomers. Carefully slide the rotary unit of the mechanical seal down the shaft. Rotate the seal to locate the pin on the bottom of the seal with the holes in the shaft sleeve (33-125SV only). Cycle seal up and down to lubricate o-ring and prevent seal from sticking to shaft. See step 8 in Figure 5.
9. Install a new seal housing o-ring on the seal housing. A lubricant can be used to hold the o-ring on the diameter of the seal housing.

   Carefully reinstall the seal housing between the pump and motor shaft and slide the seal housing down the shaft into position. **Use caution when mounting the seal housing between the pump/motor shaft so that the seal face on the stationary seat is not damaged.** See step 9 in Figure 5.
10. Reinstall the 4 hex cap screws, tightening the screws evenly and then torquing them to the values given in the engineering data. See step 10 in Figure 5.
11. Reinstall the coupling pin and locate the space shim on the shaft on the seal housing. **If the shim is not available, a 5 mm spacer can be used.** See step 11 in Figure 5.
12. Reinstall the coupling halves and evenly tighten the coupling bolts and torque them to the values given in the coupling section. Remove the spacer shim and save for future use. See step 12 in Figure 5.
13. Rotate the shaft by hand to insure that the pump and motor rotate freely. Reinstall the coupling guard.
14. The pump and system should be vented prior to starting the pump. See Section 3, page 13, for venting procedures.

MECHANICAL SEAL REPLACEMENT

(Sizes 33SV-125SV) Fitted with Cartridge Seals

1. Complete steps 1-4 as defined above for conventional seals.
2. Loosen the 4 set screws located around the ID of the pump shaft.
3. Remove the cartridge seal using the two tapped holes provided on the gland of the cartridge seal by threading two of the hex cap screws into these holes and evenly tightening these screws. Lift and remove the cartridge seal between the pump and motor shaft.
4. Inspect the pump shaft for any burrs or debris. Any burrs should be ground smooth with (fine grit) emery paper.
5. Install a new o-ring on the turned fit of the new cartridge seal. Lubricate the o-ring located in the ID of the cartridge seal. Use a lubricant compatible with the seal elastomers to hold the o-ring.
6. Install the new cartridge seal on the pump by carefully sliding it between the pump and motor shaft and then sliding it into position.
7. Complete steps 11-14 as defined above for the conventional seals.
8. After installing the coupling, tighten the four set screws located in the collar of the cartridge seal to secure the seal to the pump shaft.
9. Rotate the shaft by hand to insure that the pump and motor rotate freely. Reinstall the coupling guard.
10. Use vent connections on cartridge seal for proper venting.

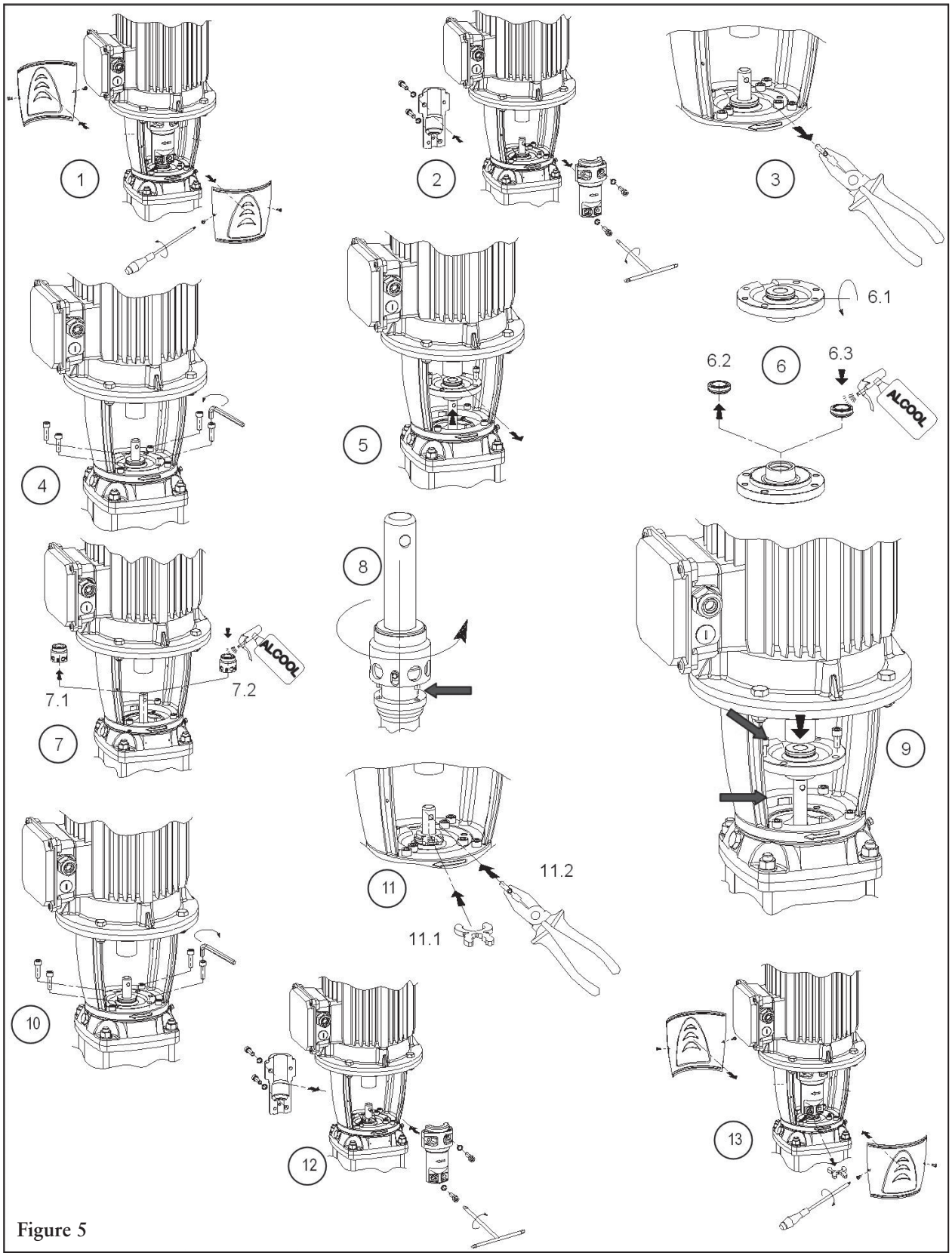

Figure 5

MOTOR REPLACEMENT

To remove the motor follow steps 1 through 4, as provided in the **"MECHANICAL SEAL REPLACEMENT"** section of this manual.

For motor frames 213TC and larger, remove the 4 motor hex cap screws and the motor adapter.

Install the motor adapter flange onto the new motor, torquing the 4 hex cap screws to the values provided in the **"ENGINEERING DATA"** section of this manual.

Complete the reassembly following steps 17 through 22 in the **"MECHANICAL SEAL REPLACEMENT"** section of this manual.

All additional unit service or maintenance, not addressed in this manual, should be performed at a qualified service location. Contact your local dealer or Goulds Water Technology distributor for assistance.

TROUBLESHOOTING GUIDE

⚠WARNING
Hazardous voltage

DISCONNECT AND LOCKOUT ELECTRICAL POWER BEFORE ATTEMPTING ANY MAINTENANCE. FAILURE TO DO SO CAN CAUSE SHOCK, BURNS OR DEATH.

SYMPTOM

MOTOR NOT RUNNING
See Probable Cause – 1 through 5

LITTLE OR NO LIQUID DELIVERED BY PUMP
See Probable Cause – 6 through 12

POWER CONSUMPTION TOO HIGH
See Probable Cause – 3, 12, 13, 15

EXCESSIVE NOISE AND VIBRATION
See Probable Cause – 3, 6 - 8, 10, 12, 13, 16

PROBABLE CAUSE

1. Motor thermal protector tripped.
2. Open circuit breaker or blown fuse.
3. Impellers binding.
4. Motor improperly wired.
5. Defective motor.
6. Pump is not primed, air or gases in liquid.
7. Discharge, suction plugged or valve closed.
8. Incorrect rotation (three phase only).
9. Low voltage or phase loss.
10. Impellers worn or plugged.
11. System head too high.
12. $NPSH_A$ too low – excessive suction lift or losses.
13. Discharge head too low – excessive flow rate.
14. Fluid viscosity, specific gravity too high.
15. Worn bearing.
16. Pump, motor or piping loose.

ENGINEERING DATA

TORQUE VALUES

HP	Motor Bolt	Adapter Flange	Coupling		
			1-5SV	10-22SV	33-92SV
0.75-7.5 HP	20 lbs ft (27 N·m)	–	15 lbs ft (20 N·m)	40 lbs ft (54 N·m)	37 lbs ft (50 N·m)
10-75 HP	45 lbs ft (61 N·m)	48 lbs ft (65 N·m)*	15 lbs ft (20 N·m)	40 lbs ft (54 N·m)	48 lbs ft (65 N·m)

*213TC and 215TC Adapter Flange use 30 lbs ft (40 N m)

TORQUE VALUES

Pump Size	Tie Rod Nuts	Vent and Drain
1-5SV	22 lbs ft (30 N·m)	15 lbs ft (20 N·m)
10-22SV	37 lbs ft (50 N·m)	15 lbs ft (20 N·m)
33-125SV	44 lbs ft (60 N·m)	29 lbs ft (40 N·m)

VENT NEEDLE

Pump Size	
1-5SV	7 lbs ft (9.5 N·m)
10-22SV	
33-125SV	

TYPICAL PLUMBING AND INSTALLATION

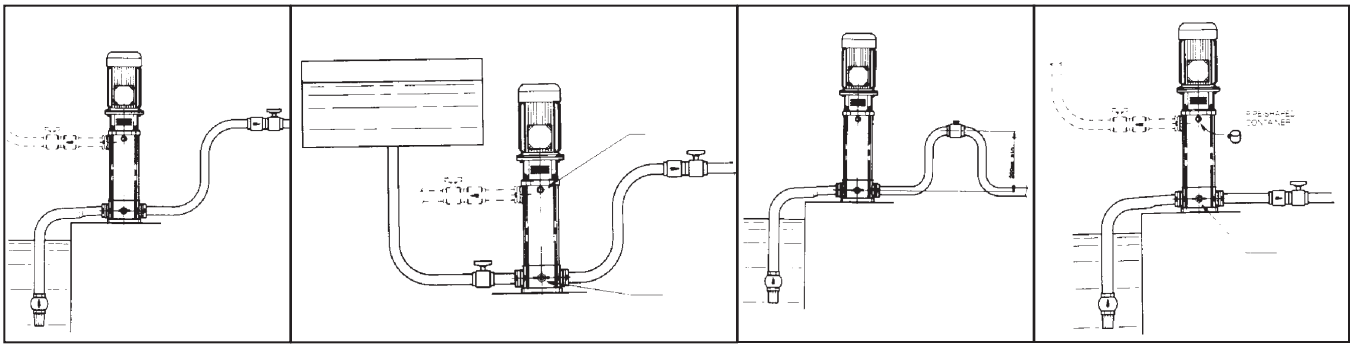

NOTE: Discharge loop must be high enough to keep liquid in the bottom stages during shut-down.

spirax sarco

INSTALLATION AND MAINTENANCE INSTRUCTIONS

IM-3-000-US **May 2011**

Type 25P & 25PA Pressure Reducing Valves

Installing the Valve

Unpack Carefully

Do not lift the regulator by the tubing. Grasp the body of the valve firmly when lifting.

Piping

1. Typical hookup sketches as shown in Figs. 1 and 2 will aid in planning a correct installation.

2. Piping on the downstream side of the valve should be increased so as not to restrict flow.

3. Swage nipples are recommended for changes in pipe sizes.

4. Before installing the valve make sure the piping is free of foreign material, scale, etc.

5. Make certain the arrow cast on valve body is pointing in the direction of flow.

6. Valve should always be installed in a horizontal position. (See Figs. 1 and 2.)

7. Pressure Gauges must be installed on both sides of the reducing valve.

Pilot Pressure Sensing Line

1. Copper tubing (1/4" OD) can be used for the sensing line with suitable compression fittings or as alternative 1/4" piping can be used.

2. Connect the sensing line to a straight portion of the piping 10 pipe diameters from nearest fitting downstream from the valve and approximately 1 foot from elbows, tees, valves and other restrictions. (See Figs. 1 and 2.)

3. When the reducing valve is serving a single piece of equipment, the sensing line can be connected to the steam space of the equipment.

4. Install a small gate valve in the sensing line so that this can be closed when servicing the regulator.

5. The sensing line must be pitched downward from the main valve to insure proper drainage.

6. To permit accurate setting of the pressure regulator, a pressure gauge should be installed as close as possible to the pilot sensing line connection.

Bypass

1. A bypass connection, as shown in Figs. 1 and 2, is recommended so that the valve can be serviced without shutting down the equipment.

2. The bypass valve should be the same size as the pressure reducing valve.

Steam Line Drain Trap

1. To insure proper operation of the valve and avoid premature wear, it is recommended that a 1/2" Spirax Sarco thermodynamic steam trap be installed on the steam supply line. (See Figs. 1 and 2.)

2. A steam trap should also be installed in the downstream piping at the heel of each rise, between all reducing valves installed in series, and ahead of any manual or automatic valve. This will prevent condensate accumulation that can result in waterhammer damage.

Pipeline Strainers

1. It is strongly recommended that strainers be installed before the reducing valve and steam traps.

2. Make certain adequate clearance is provided for screen removal and blowdown connection between strainer and valve body.

Stop Valves

All stop valves on the supply side, as well as on the downstream side of the pressure reducing valve and sensing line, should be of the gate type so as to insure full rated capacity and good control.

Separators

It is recommended that a line size separator is installed before all pressure reducing stations where the pipeline supply is longer than 50 ft from a trapping station or where exposure or piping configurations lead to the accumulation of significant amounts of condensate ahead of the PRV station.

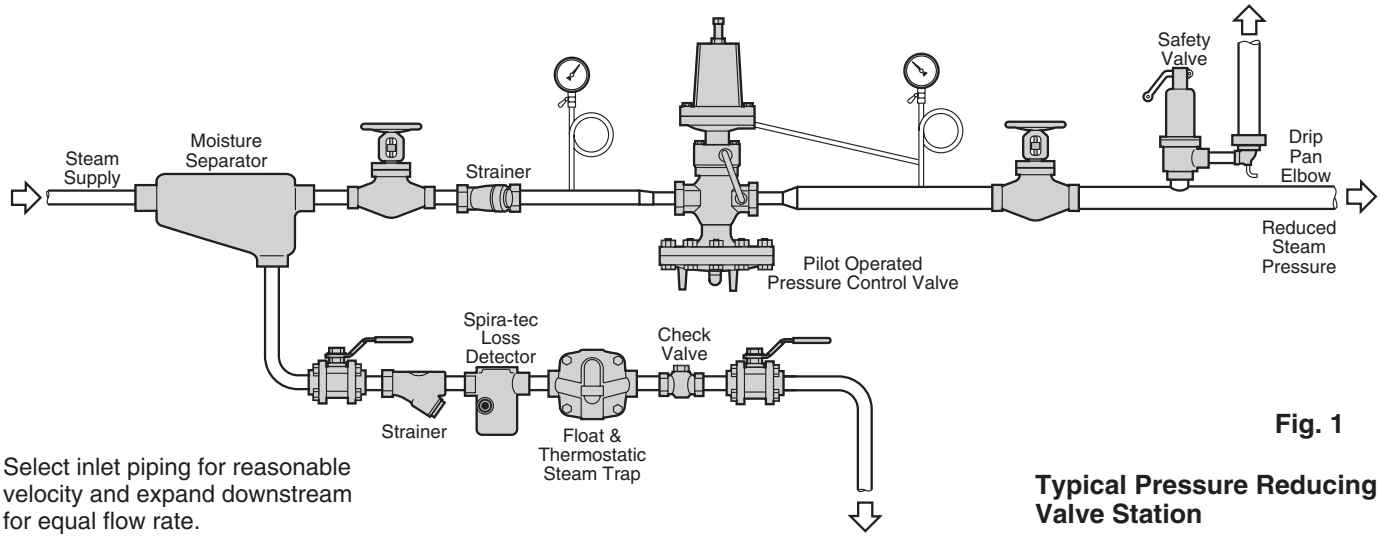

Select inlet piping for reasonable velocity and expand downstream for equal flow rate.

Fig. 1

Typical Pressure Reducing Valve Station

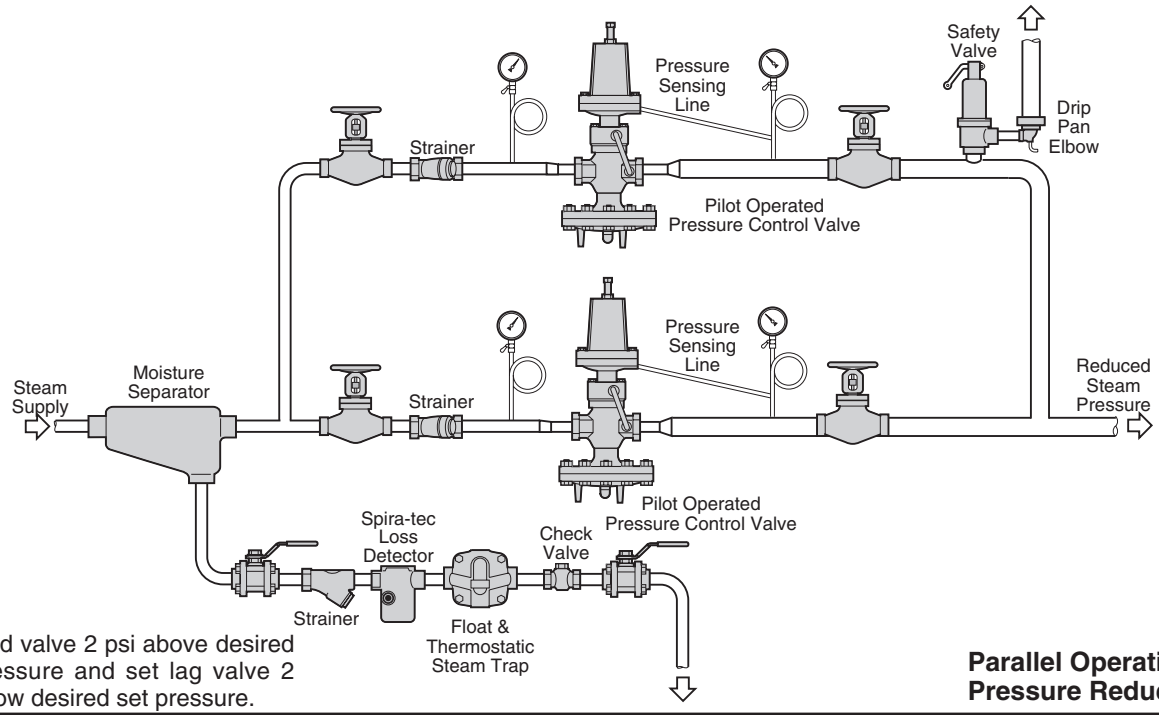

Set lead valve 2 psi above desired set pressure and set lag valve 2 psi below desired set pressure.

Fig. 2

Parallel Operation of Pressure Reducing Valves

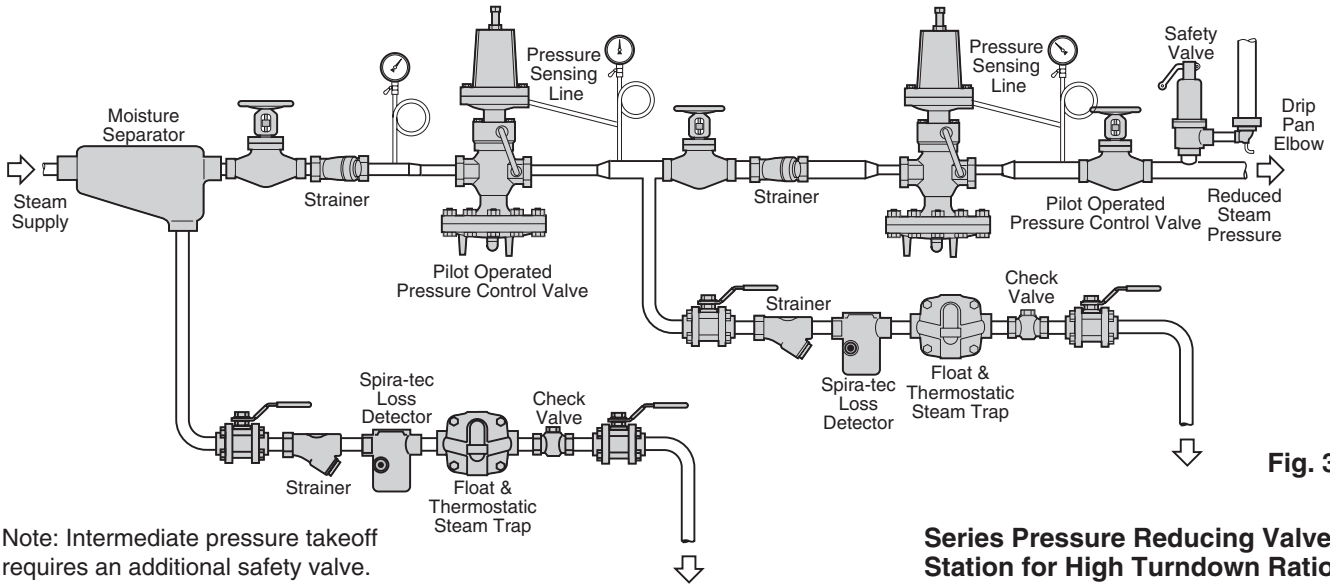

Note: Intermediate pressure takeoff requires an additional safety valve.

Fig. 3

Series Pressure Reducing Valve Station for High Turndown Rations

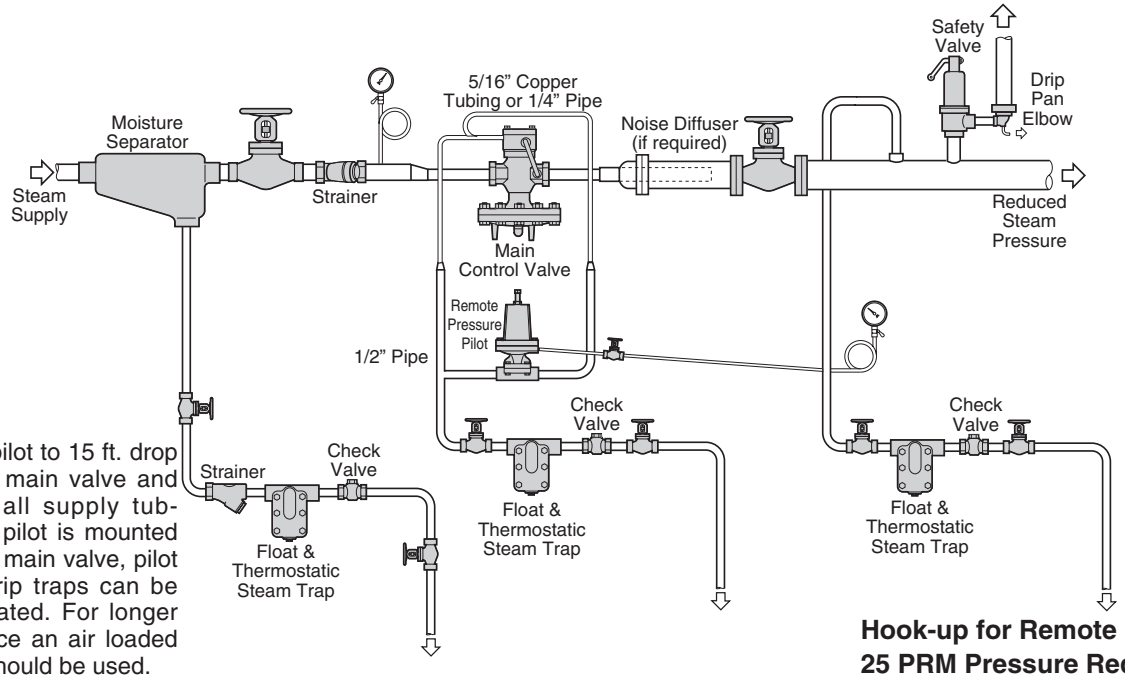

Limit pilot to 15 ft. drop below main valve and drain all supply tubing. If pilot is mounted above main valve, pilot line drip traps can be eliminated. For longer distance an air loaded pilot should be used.

Hook-up for Remote Operation of 25 PRM Pressure Reducing Valve

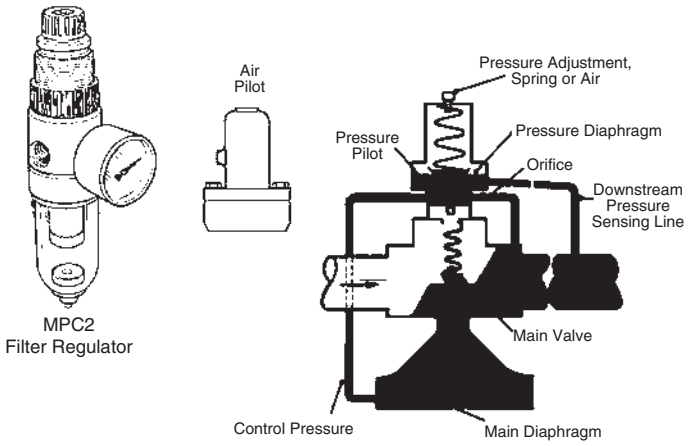

How the 25P & 25PA Work

Normal positions before start-up are with the main valve closed and the pilot valve held open by spring force or air pressure. Entering steam passes through the pilot valve into the main diaphragm chamber and also out through the control orifice. As flow through the pilot valve exceeds flow through the orifice, control pressure increases in the diaphragm chamber and opens the main valve. As steam flows through the main valve, the increase in downstream pressure feeds back through the pressure sensing line to the underside of the pressure diaphragm. When the force below that diaphragm balances the compression force of the spring above it, the pilot valve throttles. The control pressure maintained in the main diaphragm chamber positions the main valve to deliver just enough steam for the desired delivery pressure. Adjustment of the spring or air pressure above the pressure diaphragm changes the downstream pressure set point. When steam is no longer required, the sensing line pressure increases closing the pressure pilot and the control pressure bleeds back through the control orifice. This allows the main valve to hold the desired reduced pressure, and it may close tight for a dead-end shutoff.

Start-up

1. First make certain that all stop valves are closed.
2. Remove pilot spring cover then turn the pressure pilot adjustment (2D) counter-clockwise until spring is slack. Make certain spring remains in vertical position and centered in its retainers.

   Air loaded PA pilots must have no air pressure supplied to them.
3. Open stop valves in the following order:
   a. Open stop valve ahead of steam trap on steam supply line. This will insure water free steam at the regulator inlet when put into operation.
   b. Open small gate valve on pressure sensing line.
   c. Open downstream stop valve.
   d. Slowly open inlet stop valve.
4. Slowly adjust pilot spring at (2D) turning clockwise until reduced pressure required is indicated on pressure gauge downstream of valve.
5. Once the system has stabilized itself it may be necessary to make re-adjustment of pilot spring (2D). Replace spring cover then tighten adjustment locknut.
6. Important—Retighten all pilot flange connections to insure steam tight joints.
7. Air Loading PA Pilot requires air loading as indicated in the following table.

Desired Outlet Steam Pressure P2 psig	**5**	**10**	**25**	**50**	**75**	**100**
Inlet Pressure P1 psig	**10 psig to 100 psig**					
Approximate Air Set Pressure psig	**11 to 13.5**	**16 to 16.8**	**31 to 33.5**	**56 to 58**	**80 to 81**	**102 to 103**

Troubleshooting

(Refer to Figs. 6, 7 and 8)

Symptom	Cause	Check and Cure
1. Controlled pressure overshoots under normal load conditions	1. (a) Dirt or foreign material between pilot valve seat and head.	1. (a) Loosen screw (2D). Remove copper tubing connections at (J & L). With steam on valve, if steam flows from copper tubing connections at (J & L) remove pilot head and seat assembly (2H) and clean or replace.
	(b) Foreign particles between main valve head and seat.	(b) Inspect and clean head and seat
	(c) Orifices (B) and (H) or pressure sensing line may be plugged.	(c) Remove, inspect and clean.
2. Controlled pressure overshoots only on light loads.	2. (a) Main valve head and seat worn or dirt between them.	2. (a) Inspect and clean head and seat.
	(b) Valve may be severely oversized.	(b) Adjust screw (2D) to give desired pressure under light loads.
	(c) Bypass valve not shut tightly or leaking.	(c) Check and repair as required.
	(d) Dirt or foreign material on main valve stem and guide (1F).	(d) Remove, inspect and clean.
3. Valve fails to open.	3. (a) Main valve diaphragm ruptured.	3. (a) Unscrew copper tubing connection at (G) and crack bypass valve. If steam flows from main valve diaphragm case, diaphragm is defective and must be replaced.
	(b) Orifice (H) is plugged	(b) Remove and clean.
	(c) Pilot valve seat is plugged with dirt.	(c) Remove head and seat assembly (2H). Inspect and clean or replace.
	(d) Screen (1D) is plugged.	(d) Inspect screen and clean.
	(e) Pipeline strainer blocked.	(e) Inspect and clean.
	(f) Pilot valve adjustment (2D) or air loading pressure not properly adjusted.	(f) Adjust screw (2D) to desired pressure. Check air supply to PA pilots.
4. Delivery pressure low.	4. (a) Pilot valve adjustment (2D) not properly adjusted.	4. (a) Adjustment screw (2D) to desired pressure.
	(b) Valve undersized.	(b) Check actual load against valve rating.
	(c) Steam supply pressure too low.	(c) Check and correct.
	(d) Main valve diaphragm ruptured.	(d) Unscrew copper tubing connection (G) and crack bypass valve. If steam flows from diaphragm case, diaphragm is defective and must be replaced.
	(e) Bleed orifice (B) missing.	(e) Replace proper fitting.
5. Valve fails to close.	5. (a) Bypass valve open or leaking.	5. (a) Check and repair as required.
	(b) Pilot sensing line blocked (or not installed).	(b) Remove, inspect, clean or install.
	(c) Pilot ruptured (water or steam coming from pilot at spring retainer area).	(c) Replace pilot diaphragm assembly.
	(d) Pilot assembly or main valve seat threads leaking.	(d) Check casting in seat area for erosion.
	(e) Main valve diaphragm reassembled without return spring and main valve cover holding valve head closed. (1/2” thru 4” sizes only).	(e) With main valve cover installed, loosen all main valve diaphragm bolts (1C) and then retighten.

Maintenance

General Inspection

While a program of planned maintenance is always to be recommended, the Spirax Sarco 25P valve will give long and trouble-free service if correctly selected, installed and kept reasonably free of dirt and foreign matter. Dirt and foreign matter are most likely to collect during installation and later trouble can be avoided by inspecting the installation after a few days. Check the following:

1. Clean all pipeline strainers. (Remove screens to clean.)
2. Check the main valve seat (1E) and protective screen (1D).
3. Inspect and clean orifices (B) and (H).
4. Check all joints for leakage.

Servicing Procedure (Refer to Fig. 6 and 9)

To determine which part of a malfunctioning pressure reducing valve requires maintenance, refer to the trouble-shooting chart and follow this servicing procedure to check the tightness of the seats.

1. With all stop valves closed and the valve cooled down, remove the copper tubing from connectors (J) and (L) being careful not to bend them.
2. Close the pilot valve (2H) by turning the pressure adjustment (2D) counter-clockwise until the spring is slack. (No air pressure supplied to the type PA pilot).
3. Stand clear of the tubing connectors and open the inlet stop valve slightly so that a small amount of steam reaches the valve inlet and pilot.
4. Open and close the pilot valve a few times by turning the pressure adjustment (2D) and observe the steam flow from tubing connectors (J) and (L). When the pilot valve is closed, there should be no steam flow from the connectors; if there is some steam flow, it indicates that the pilot valve assembly (2H) is faulty and must be replaced.
5. With the copper tubing removed the main valve head and seat are held closed and should not pass any steam. Observe the downstream orifice connector (B). Steam flow from this connector indicates that the main valve head and seat are leaking and require servicing.

Inspecting and Replacing Pilot Valve Head and Seat (Refer to Fig. 6 and 9)

1. Remove 4 pressure pilot flange cap screws and lift off pressure pilot. Visual examination can be made of the pilot valve head and seat.
2. Pilot valve head and seat are contained in one complete assembly. (See Fig. 6.)
3. To remove head and seat assembly (2H), unscrew hexagon, using 11/16” hex wrench.
4. If it is found that either the head or seat is worn, the entire assembly should be replaced.

Inspecting and Replacing Pilot Valve Diaphragms (Refer to Fig. 6 and 9)

1. Turn adjustment screw (2D) counterclockwise until spring is slack. Air loaded PA pilots must have no air pressure supplied to them.
2. Remove cap screws (2C). Pilot yoke (2B) can then be removed.
3. The 2 metal diaphragms (2F) can then be inspected for distortion or possible fracture as a result of abnormal operation.
4. At the same time any accumulation of dirt or foreign material should be removed from the lower diaphragm pilot case.
5. When replacing diaphragms, make certain casting surface is clean to insure a steam tight joint. Application of a plastic compound on the casting surface, such as Garlock 101, is recommended.
6. Position pilot yoke on lower diaphragm pilot casting making certain that the yoke is properly centered.
7. Tighten all cap screws uniformly. To an assembly torque of 15-20 ft/lbs.

Valve Sizes 1/2” Thru 4” Inspecting and Replacing Main Valve Head and Seat (Refer to Figs. 6, 7, and 9)

1. Unscrew copper tubing connections at (J) and (L).
2. Remove main valve cover cap screws (1A).
3. Remove main valve cover, strainer screen (1D), spring support disc and head spring.
4. Head can then be removed by simply withdrawing with a pliers or similar tool.
5. Inspection should then be made to determine if scale or other foreign material prevented tight closure of the head and seat.
6. If it is necessary to replace the valve seat, this can be removed from the valve body using a standard hexagon socket. (Valve sizes 1/2” to 2”.) When replacing the valve seat, a new gasket should be used to insure a tight joint.

   2-1/2” thru 6” valves contain raised lugs for removal and seal metal-to-metal without a gasket. Replacement heads and seats should be lapped in.

Valve Sizes 1/2” Thru 4”
Inspecting and Replacing Main Valve Diaphragms (Refer to Figs. 5, 6, 7, and 9)

1. Unscrew copper tubing connection at (G).

2. Remove main valve diaphragm bolts (1C).

3. This will allow the lower diaphragm case to be removed.

4. The 2 metal diaphragms (1H) should be inspected to insure that they have not become distorted or possibly fractured as a result of abnormal operating conditions.

5. At the same time any accumulation of dirt or foreign material should be removed from the diaphragm case.

6. The valve stem should also be checked to make sure it is free to move and that there is no scale or foreign material lodged in the guide bushing (1F).

7. **Before reassembling diaphragms in 1/2” thru 4” sizes, main valve head must be in place and head in a closed position with the return spring and main valve cover.**

8. Make certain pressure plate (1G) is set properly. (Refer to Fig. 5.)

9. Care should be taken in centering the diaphragms properly and equalizing bolt take-up uniformly.

6” Valve Only
Inspecting and Replacing Main Valve Diaphragm, Seat, and Head Assembly (Refer to Fig. 8)

Diaphragms

1. Unscrew copper tubing connections (G) to lower diaphragm chamber.

2. Remove main valve diaphragm bolts (1C) and drop lower diaphragm case.

3. The 2 metal diaphragms (1H) should be inspected and replaced if they have become distorted or fractured.

4. Clean any accumulation of dirt from the diaphragm case and orifice (H).

Servicing the Main Valve Head and Seat

5. Loosen the diaphragm plate set screw and remove the diaphragm plate (1G).

6. Remove the top cover bolts (1A) and cover.

7. Remove the stem and head assembly from the valve. Inspect the head and seat for wear.

8. Check the body erosion around the seat ring.

9. Replacement seats and heads should be lapped in, and minor wear can be corrected by lapping with 400 grit compound.

10. On re-assembly be sure diaphragm plate (1G) is set and set screw securely tightened.

NOTE: For replacement parts refer to Spirax Sarco Replacement Parts Reference Guide.

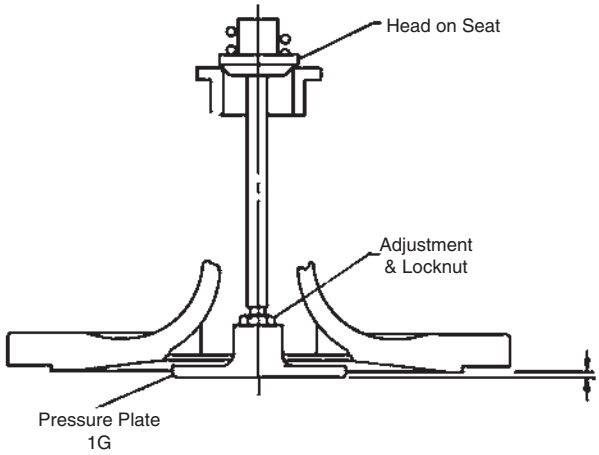

Fig. 5—Note in 1/2” and 4” sizes, top of valve must be completely assembled and head must be on seat when measuring dimension “A” and when re-assembling diaphragms.

Size	1/2” & 3/4”	1”	1-1/4 & 1-1/2”	2”	2-1/2”	3”	4”	6”
Dim. A	1/16”	5/64”	3/32”	1/8”	13/64”	13/64”	1/4”	27/64

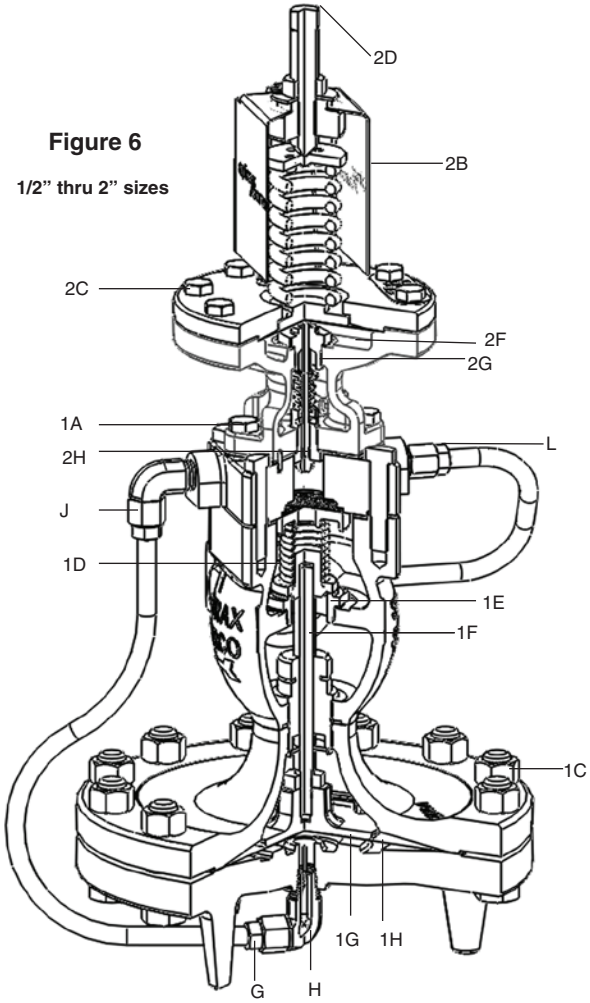

Figure 6

1/2" thru 2" sizes

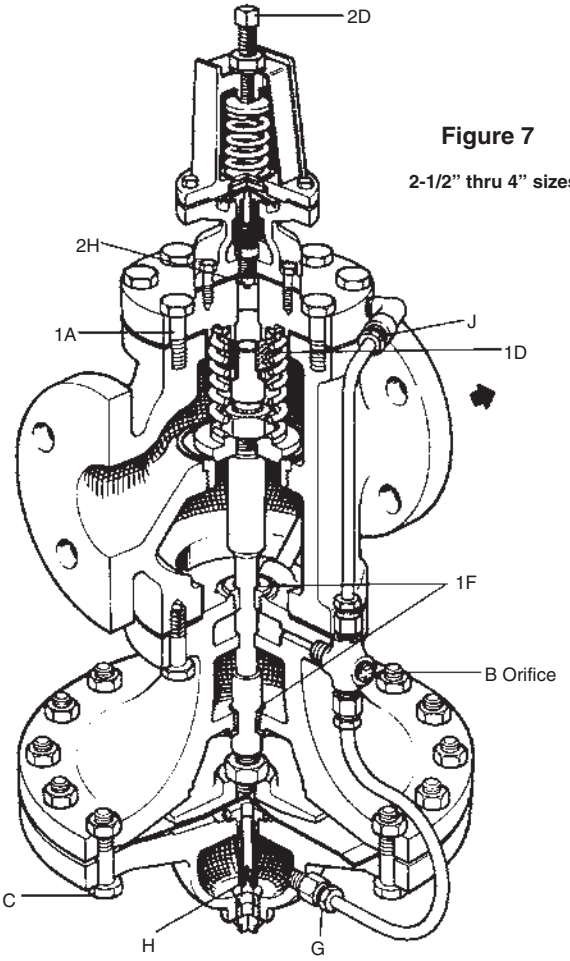

Figure 7

2-1/2" thru 4" sizes

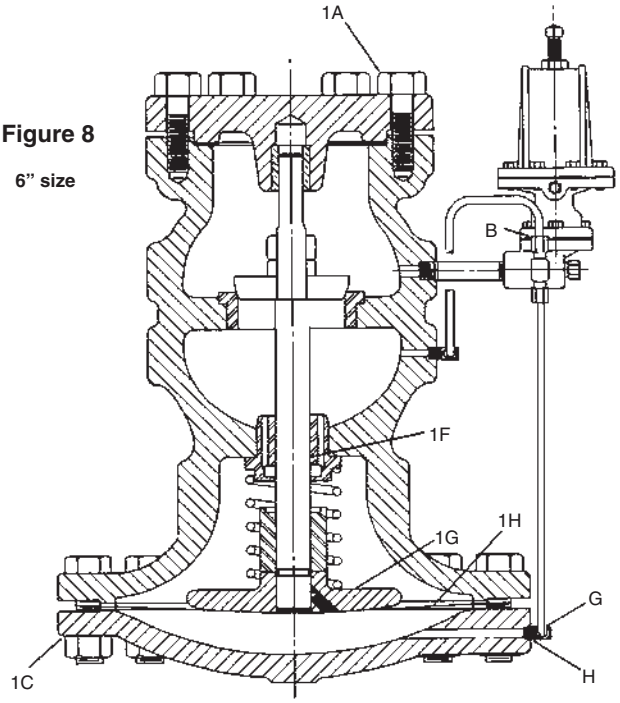

Figure 8

6" size

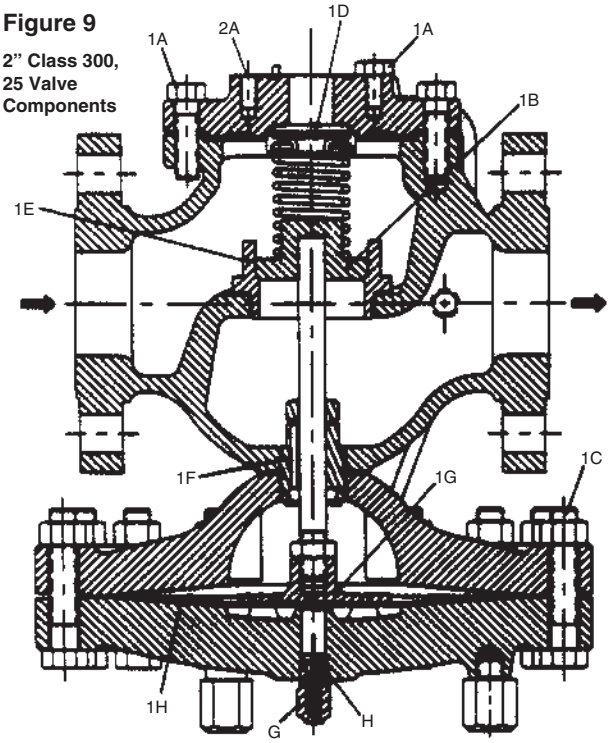

Figure 9

2" Class 300, 25 Valve Components

1/2” thru 2”

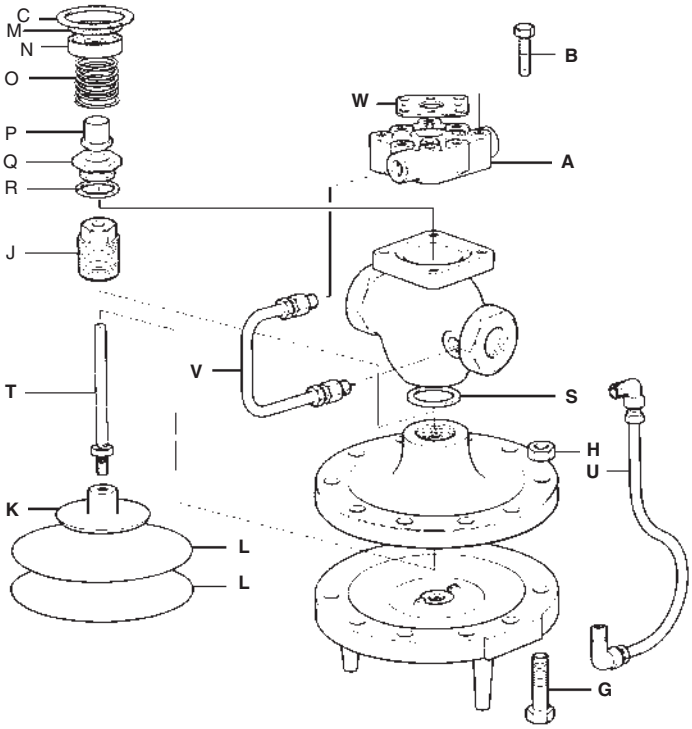

Spare Parts – Main Valve

Cover Assembly w/ Cap Screws & Gasket	A,B, C
Diaphragm Case Bolts & Nuts	G,H
Screen, Spring Support Disc, Valve Spring & Cap Gasket	M, N, O, C
Cap Gasket, Valve Head, Seat & Seat Gasket (2) specify regular or reduced port “S” valve	C, P, Q, R
Valve Stem Guide & Gasket	J, S, T
Diaphragm Plate	K
Diaphragms (2 ply)	L
Transmission Tubing w/ Assembly	U, V
Gasket Kit	C, R, S, W
Rebuild Kit	B, C, L, M, O, P, Q, R U, V, W

2-1/2” thru 4”

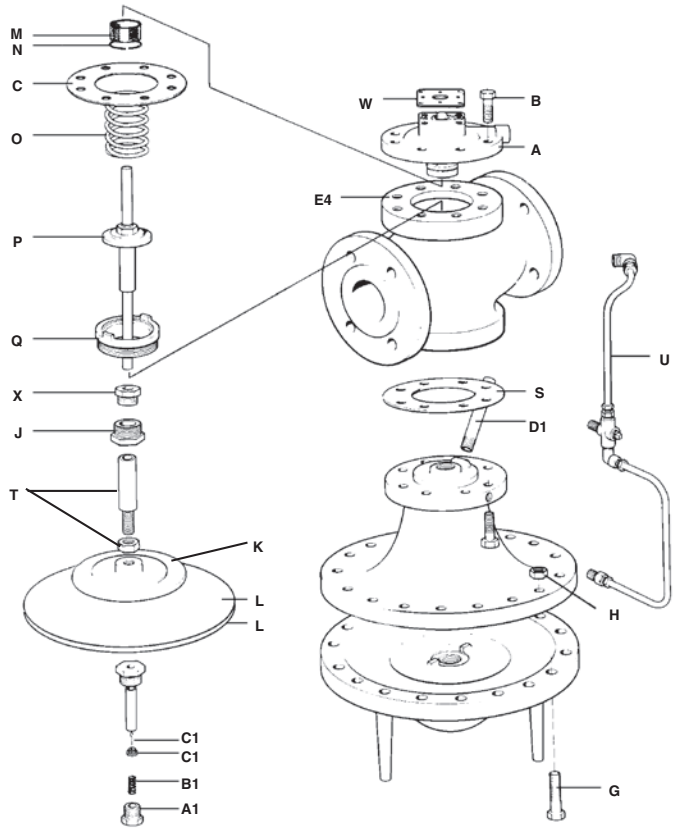

Spare Parts – Main Valve

Cover Assembly w/ Cap Screws & Gasket	A,B, C
Diaphragm Case Bolts & Nuts	G,H
Screen, Spring Support Disc, Valve Spring & Cap Gasket	M, N, O, C
Cap Gasket, Valve Head, Seat & Seat Gasket (2) specify regular or reduced port “S” valve	C, P, Q, X
Diaphragms (2 ply)	L
Transmission Tubing w/ Assembly	U
Gasket Kit	S, W, C
Damping Assembly	A1, B1, C1
Diaphragm Plate	K
Lower Stem & Guide	J, T
Relief Tube	D1
Rebuild Kit	B, C, L, M, O, P, Q, R, U, W

Transmission Tubing

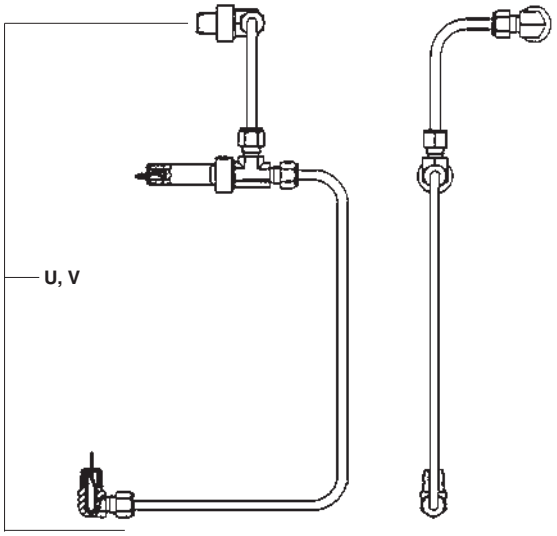

6”

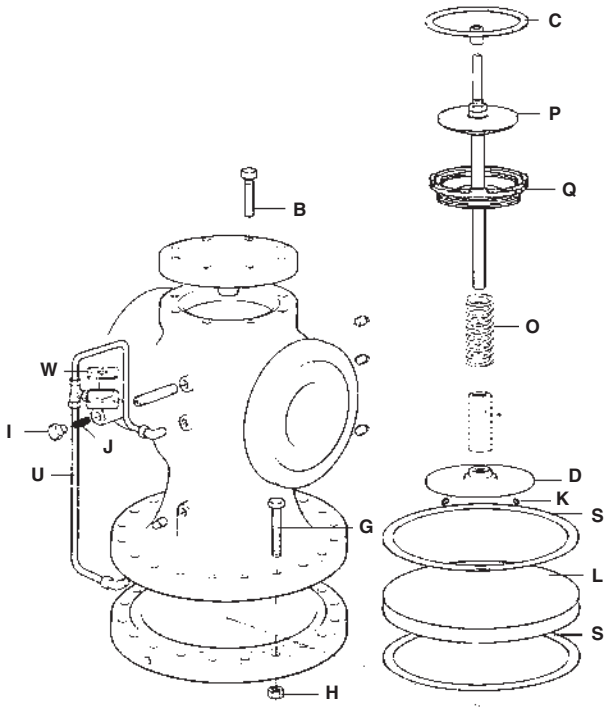

Spare Parts – Main Valve

Main Valve Spring & Lower Diaphragm Cover Gaskets	O, S
Diaphragm Plate & Set Screws	K, D
Transmission Tubing with Fittings	U*
Diaphragms (2 per set)	L*
Gasket Kit	C, S, W*
Head, Stem & Seat Assembly	P, Q, C
“S” Head, Stem & Seat Assembly	P, Q, C
Screen Assembly	I, J
Cover Bolt Kit	B
Diaphragm Case Bolt Kit	G, H

Spares Kits
** A standby set of spares for general maintenance purposes includes all spares marked*

How to Size Piping for 25-Series Regulators

Principle

When steam pressure is lowered through a reducing valve, the steam expands creating a higher velocity. The extreme velocities that must exist across reducing valve seats cannot be tolerated in pipes supplying the valves and leading from them. Erosion and noise would be prohibitive.

It is recommended practice in heating systems to limit velocities to between 4,000 and 6,000 feet per minute. Higher velocities are often acceptable outdoors and in plants where the environment is already noisy.

This chart lists steam capacities of pipes under various pressure and velocity conditions.

Example

Given a steam heating system with a 100 psig inlet pressure ahead of the pressure reducing valve and a capacity of 1,000 pounds per hour at a reduced pressure of 25 psig, find the smallest sizes of upstream and downstream piping for reasonable steam velocities.

Upstream Piping

Enter the velocity chart at point A for 1,000 pounds per hour. Proceed horizontally to point B where the 100 psig diagonal line intersects.

Follow up vertically to point C where an intersection with a diagonal line falls inside the 4,000 to 6,000 feet per minute velocity band. Actual velocity (see point D) is about 4,800 feet per minute for 1-1/2 inch upstream piping.

Downstream Piping

Enter the velocity chart at point A for 1,000 pounds per hour. Proceed horizontally to point E where the 25 psig diagonal line intersects.

Follow up vertically to point F where an intersection with a diagonal line falls inside the 4,000 to 6,000 feet per minute velocity band. Actual velocity (see point G) is about 5,500 feet per minute for 2-1/2 inch downstream piping.

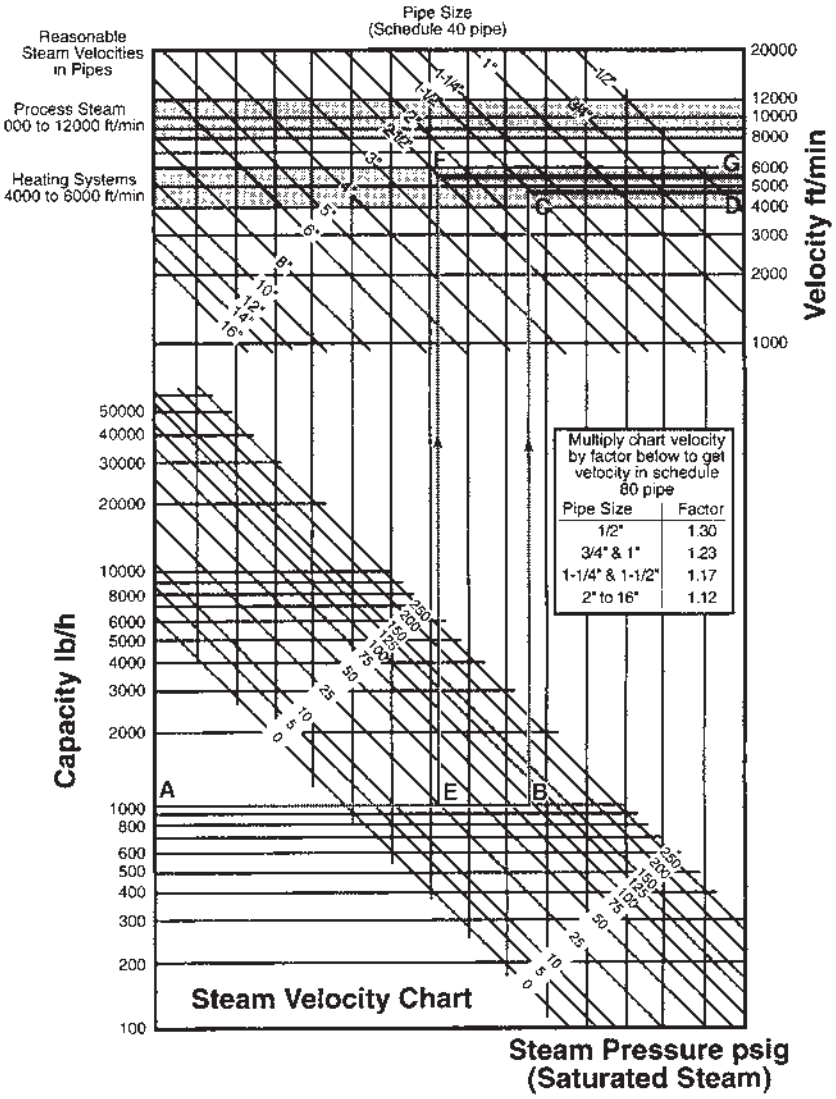

For any additional information you may require, contact:
Spirax Sarco Applications Engineering Department
Toll Free at:
1-800-833-3246

spirax sarco

SPIRAX SARCO, INC. • 1150 NORTHPOINT BLVD. • BLYTHEWOOD, SC 29016
PHONE 803-714-2000 • FAX 803-714-2222 • www.spiraxsarco.com/us

azbil

CM2-GTX100-2001

AT9000 Advanced Transmitter Electronic Differential Pressure/ Pressure Transmitter

User's Manual

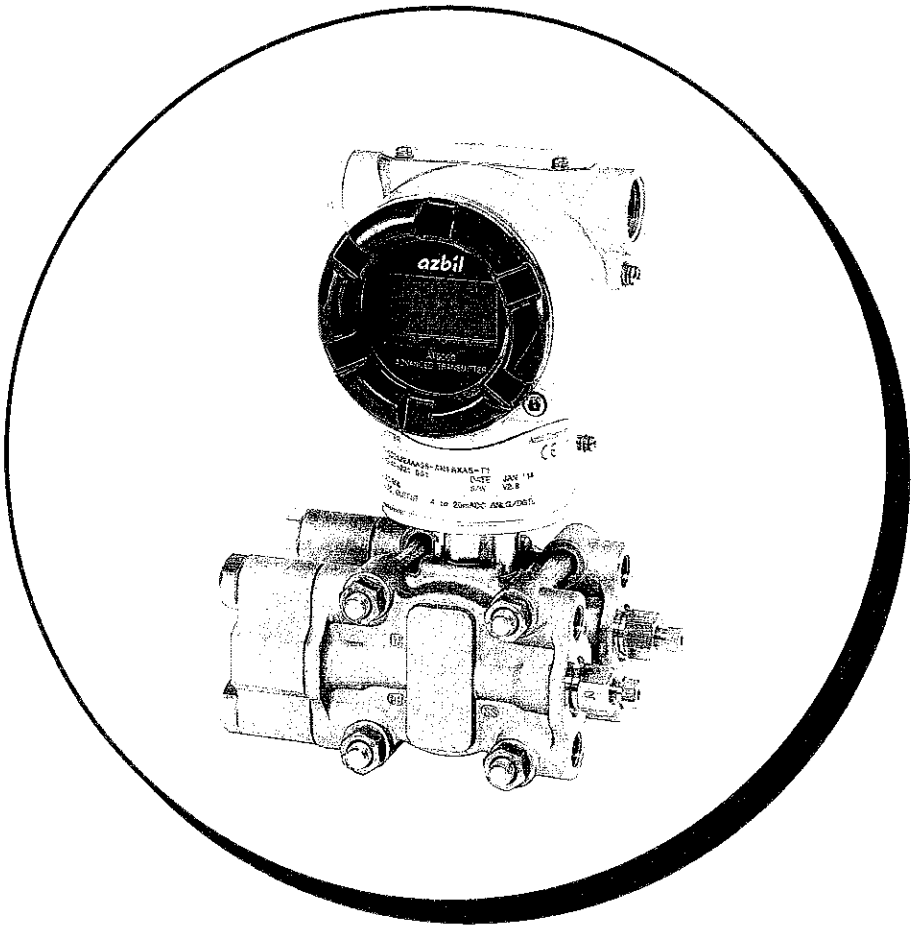

Azbil Corporation

NOTICE

While the information in this manual is presented in good faith ands believed to be accurate, Azbil Corporation disclaims any implied warranty of merchantability or fitness for a particular purpose and makes no express warranties except as may be stated in its written agreement with and for its customer.

In no event shall Azbil Corporation be liable to anyone for any indirect, special or consequential damages. This information and specifications in this document are subject to change without notice.

This product has been designed, developed, and manufactured for general-purpose and explosion-proof applications in machinery and equipment. Never use this product in applications where human life may be put at risk, or in radiation-controlled areas for nuclear applications.

Especially when this product is used in applications where safety is critical, such as safety devices for plant worker protection, direct control of transportation equipment, or aeronautical or aerospace equipment, special care should be taken to implement a fail-safe and redundant design concept as well as a periodic maintenance program.

For details on system design, application design, instructions on use, suitable applications, etc., contact the azbil Group. In no event is Azbil Corporation liable to anyone for any indirect, special, or consequential damages as a result of using this product.

Warranty

The conditions for warranty of this product are shown below.

Within the warranty period, if the product has some defect for which Azbil Corporation is responsible, the company will repair the product or provide a replacement.

1. Warranty period

   The warranty period is one (1) year from the date of delivery of the product to the location specified by the customer.

   However, if the product is repaired for a fee, the warranty period is 3 months from the date of delivery of the repaired product.

2. Exemptions

   The following cases are exempted from the warranty.

   (1) A problem caused by incorrect handling, modification, or repair made by any person other than Azbil Corporation or a subcontractor commissioned by the company.

   (2) A problem caused by handling, use, or storage that exceeds the operating conditions stated in the user's manual, specifications sheet, or delivery specification sheet.

   (3) A problem caused by corrosion of wetted surfaces.

   (4) Other problems for which Azbil Corporation is not responsible.

3. Other

   (1) In the case of a warranty contract with Azbil Corporation other than this warranty, the contract has priority over this warranty.

   (2) Whether product repair is free of charge depends on the results of inspection by Azbil Corporation.

Safety

Instructions

Preface

Correct installation and periodic maintenance are essential to the safe use of your differential pressure transmitters.

Read the safety instructions provided in this manual carefully and understand them fully before starting installation, operation, and maintenance work.

Inspection

On delivery, make sure that the specifications are correct and check for any damage that may have occurred during transportation. This equipment was tested under a strict quality control program before shipment. If you find any problem in the quality specifications, please contact an Azbil Corp. representative immediately, providing the model name and serial number.

The name plate is mounted on the neck of the enclosure.

Precautions

The following symbols are used in this manual to ensure user safety.

⚠ WARNING

This symbol is used to warn of hazards where failure to observe a safety instruction may result in death or serious injury.

⚠ CAUTION

This symbol is used to warn of hazards where failure to observe a safety instruction may result in injury or physical damage.

To ensure safe operation, be sure to observe the safety instructions provided on the next page.

Azbil Corporation will assume no responsibility, or offer any guarantee for any failure resulting from violation of these safety instructions.

Handling Precautions for This Product

Installation Precautions

⚠ WARNING

- Some models of the transmitter have a mass of 10 kg or more because of differences in specifications. For your safety when transporting or installing the transmitter, use a dolly or two or more people. Carelessly lifting the transmitter and accidentally dropping it can cause injury or damage.
- When installing the transmitter, ensure that gaskets do not protrude from connecting points into the process (such as adapter flange connection points and connecting pipes and flanges). Failure to do so may cause a leak of process fluid, resulting in harm from burns, etc. In addition, if the process fluid contains toxic substances, take safety measures such as wearing goggles and a mask to prevent contact with the skin and eyes and to prevent inhalation.
- Use the transmitter within the operating ranges stated in the specifications (for explosion-proofing, pressure rating, temperature, humidity, voltage, vibration, shock, mounting direction, atmosphere, etc.). Using the transmitter outside the operating conditions may cause device failure or fire, resulting in a harmful physical risk of burning or the like.
- To ensure safety, installation and connection work should be carried out only by technicians skilled in instrumentation and electrical work. In areas where there is an explosion hazard., installation and wiring must conform to guidelines for explosion-proof electrical installations in general industrial use.

⚠ CAUTION

- After installation, do not use the transmitter as a foothold or put your weight on it. Doing so may cause damage.
- Be careful not to hit the glass indicator with tools etc. This could break the glass and cause injury.
- Carefully follow the instructions for grounding given in the user's manual. Improper grounding may affect output or violate explosion-proof guidelines.
- Impact to transmitter can damage sensor module.

Wiring Precautions

⚠ WARNING

To avoid shocks, do not perform electrical wiring work with wet hands or with live wires.

⚠ CAUTION

- Do wiring work properly in conformance with the specifications. Wiring mistakes may result in malfunction or irreparable damage to the instrument.
- Use a power supply that conforms to the specifications. Use of an improper power supply may result in malfunction or irreparable damage to the instrument.
- Use a power supply with overcurrent protection for this instrument.

Maintenance Precautions

⚠ WARNING

- Before removing this product from the process equipment for purposes of maintenance, vent the residual pressure and discharge the residual fluid. When discharging the residual pressure and fluid, check the direction of the vent or drain to prevent injury by the process fluid. Failure to do so may result in burns or other injuries. If the process fluid contains toxic substances, take safety measures such as wearing goggles and a mask to prevent contact with the skin and eyes and to prevent inhalation.
- When the device is being used in an explosion-proof area, do not open the cover. Opening the cover may cause an explosion.
- If a sealing gasket is broken, replace it with a new one. If the device runs with a broken sealing gasket, since the degree of sealing is not sufficient, the process fluid may spurt out, resulting in burns or other injuries.

⚠ CAUTION

- Do not disassemble or modify this device. Doing so may result in device failure or electric shock. Explosion-proof equipment cannot be inspected or disassembled in areas where there is an explosion hazard. In addition, the use of modified explosion-proof equipment is prohibited.
- If this device is used with a high-temperature fluid, be careful not to touch the device accidentally. Since this product can become extremely hot, contact with it may result in burns.
- If this device is no longer needed, dispose of it appropriately as industrial waste, in accordance with local regulations. Do not reuse all or a part of the device.

Precautions for Using Communication Devices

⚠ CAUTION

When using a communication device such as a transceiver, cell phone, PHS phone, or pager near this device, observe the precautions below. Otherwise, depending on the transmission frequency, this device may not function properly.

- Determine beforehand the minimum distance at which the communication device will not affect the operation of this device, and maintain a separation greater than that distance.
- Make sure the cover of its transmitter section of this device is closed before using the communication device.

Precautions for Communication

⚠ CAUTION

If transmitter output is reduced to 3.2 mA or less because of burnout, etc., communication with a HART communicator may not be possible. Try turning off the power, rebooting, and restarting communication.

Safety Manual

⚠ WARNING

Follow the instructions and procedures in this manual when the transmitter is used in SIS (Safety Instrumented Systems). Following description is applied when the AT9000 Advanced Transmitter model code Q1 of Option, "Safety Transmitter" is selected.

1. Application

Pressure measurements that shall meet the safety requirements according to IEC61508.

2. Safety related characteristics

2.1 Safety Integrity Level

The AT9000 can be used up to SIL2 application as in single use or SIL3 application as in dual use.

2.2 Start up

The safety output signal will be effective within 2 seconds after the start-up.

2.3 Safety Accuracy

The safety accuracy is +/-2% or +/-4% depending on models used.

2.4 Diagnostics time

The failures of the AT9000 can be detected within 5 minutes after they occur. The burnout signal can be output within 5 sec. after detecting the internal faults.

Item	Specification
Mode of operation	Low demand mode
SIL	SIL2 (in single use)
Device type	Type B
HFT	0 (in single use)

2.5 Safety Parameters

Safe failure rate	[FIT] 363
Dangerous detected failure rate	[FIT] 481
Dangerous undetected failure rate	[FIT] 222

MTTR=72h

Proof Test Interval	1 year	5 years
PFD	1.02E-3	4.9E-3
%SIL2	10,2%	49%

3. Safety functions

3.1 Safety- relevant signal

The safety relevant signal of the AT9000 is the analog output signal 4 to 20 mA. All safety functions refer to this analog output. The contact output or the digital output signal is not the safety relevant signal.

3.2 Normal Output

The analog current signal in the normal operating range of 3.6 to 21.6 mA including normal over range and under range is output.

3.3 Burnout output

The output will be driven to the Hi/Lo limit according to the setting.

In the following cases, the output will be driven to LO limit regardless of the burnout direction setting.

- Watchdog timer reset
- Internal voltage fault
- Readback error

After the detection of internal faults the AT9000 drives the signal to the fail alarm current of < 3.6 mA or > 21.6 mA.

In case of NE-43 option, after the detection of the internal faults the AT9000 drives the signal to the fail alarm current of = 3.6 mA or = 21.0 mA.

4. Non safety compliant activities

The transmitter output is not safety-compliant during the following activities

- Configuration modifications
- Multidrop
- Simulation
- Test of the safety function

During transmitter configuration and maintenance work on the AT9000, alternative measures must be taken to guarantee process safety.

5. Settings

The following parameters should be set to the installed AT9000.

- Burnout direction
- Write protect switch *

* When the AT9000 is used in SIS as a safety transmitter, a communicator should not be used during the normal operation.

6. Maintenance and repair

6.1 Maintenance and repair

Maintenance and repair shall be performed by a skilled and knowledgeable engineer.

6.2 Proof test

The procedure of the proof test is shown below. The test will cover 59% of possible DU failures.

i) Bypass PLC or take other appropriate action to avoid a false trip.

ii) Use the Communicator to retrieve any diagnostics and take appropriate action.

iii) Use the Communicator to change the mode to B/O simulation mode.

iv) Verify the output signal of B/O Hi.

v) Verify the output signal of B/O Lo.

vi) Return to normal operation

vii) Remove the bypass from the PLC.

The following would be added to the above test. The tests including the following will cover 99% of possible DU failures.

viii) Apply pressure to verify the output at 0%, 20%, 40%, 60%, 80% and 100%.

7. Terms and Abbreviation

SIS: Safety Instrumented Systems
SIL: Safety Integrity Level
HFT: Hardware Fault Tolerance
PFD: Probability of Failure on Demand
PLC: Programmable Logic Controller
B/O: Burnout (It means fail alarm status)
DU: Dangerous Undetected

Precautions

General Precautions

1. Checking the Product

When you accept the AT9000 Advanced Transmitter, check its appearance to make sure that it is not damaged.

An Advanced Transmitter with semi-standard or special specifications may have different accessories.

2. Check the specifications

The specifications are marked on the name plate on the outside of the transmitter case. Make sure that the specifications match your order by referring to the specifications.

In making an inquiry, identify the model No. and the product No.

3. Transportation

We recommend to transport the transmitter to the installation site in the packaged state in order to prevent damages from occurring during transportation.

4. Storage Environment

(1) Storage location

During storage, protect the transmitter from rain water as well as from heavy vibration and shock. Store it at normal temperature and humidity (about 25°C, 65%RH) as much as possible.

(2) Store the transmitter in original packaging if possible.

(3) If a used transmitter must be stored for some period, wash it thoroughly after making sure that no fluid remains in the pressure receiving section.

5. Installation Environment

In order to maintain the original performance and reliability for a long time, install the transmitter in the following environment:

(1) Ambient temperature

(a) The temperature gradient and temperature changes in installation environment should be as small as possible.

(b) If a transmitter is exposed to heat radiated from the process side, lower its ambient temperature as much as possible by insulating it or by selecting a well-ventilated location for installation.

(c) If a process fluid can freeze, prevent freezing by means of heat insulation.

(2) Environment

Pollution degree: 2
Avoid corrosive environment as much as possible.

Install in explosion proof and intrinsically safe conditions.

(3) Shock and vibration

Install the transmitter where shocks and vibrations will be as small as possible.

(4) Industrial Electromagnetic Environment

The transmitter intends to be used in an environment existing at locations characterized by a separate power network, in most cases supplied from a high- or medium-voltage transformer, dedicated for the supply of installations feeding manufacturing or similar plants with one or more of the following conditions:

- frequent switching of heavy inductive or capacitive loads;
- high currents and associated magnetic fields;
- presence of Industrial, Scientific and Medical (ISM) equipment (for example, welding machines)

6. Application of Pressure to transmitter

In applying pressure to this transmitter, observe the following rules.

(1) The locking bolts of the adapter flange are loose when shipped. Tighten them to the specified torque.

(2) Do not apply a pressure that exceeds the specified level.

(3) Do not tighten or loosen bolts while pressure is being applied to the transmitter.

7. Electronic Parts

(1) This transmitter has several CMOS electronic components. Since static electricity can easily cause the functional destruction of a CMOS component, never directly touch them or touch a circuit with your hands.

(2) Is components must be touched, equalize the potential of the components before doing so.

(3) When the printed wiring board (PWB) is removed, protect it in a non-conductive bag.

8. Contact us

Azbil Corporation
Advanced Automation Company
1-12-2 Kawana, Fujisawa-shi
Kanagawa-ken, 251-8522, Japan

PED Conformity (97/23EC)

The maximum pressures applicable under the Sound Engineering Practice (SEP) section of the Pressure Equipment Directive depend on the type of fluid measured, as shown in the table below.

Measured fluid	Group*	Pressure	Applicable models
Gas	1	200 bar (20 MPa)	All models except GTX32D, 42D, 72D, 82G
	2	1,000 bar (100 MPa)	All models
Liquid	1	500 bar (50 MPa)	All models
	2	1,000 bar (100 MPa)	All models

*Note Group 1 comprises fluids defines as: explosive, extremely flammable, highly flammable, flammable, very toxic, toxic and oxidizing.

Group 2 comprises all other fluids not refer to group 1

Any AT9000 model having a maximum working pressure that is higher than the pressure corresponding to its group does not conform to SEP.

Models GTX32D, 42D, 72D and 82G conform to PED according to Module A.

Explosion protected Models

FM Intrinsically safe, Nonincendive and Suitable Approvals

1 Rating information

1.1 Intrinsically safe

Intrinsically Safe for use in Class I, Division 1, Groups A, B, C and D; Class II, Division 1, Groups E, F and G; Class III, Division 1; Class I, Zone 0, AEx ia IIC; T4
-40 °C ≤ Tamb ≤ +60 °C

Hazardous (Classified) Locations; Indoor/Outdoor Enclosure TYPE 4X, IP67;

For entity parameters see control drawings 80395278, 80395279 and 80395280.

1.2 Nonincendive and Suitable

Nonincendive, with Nonincendive Field Wiring Parameters, for use in Class I, Division 2, Groups A, B, C and D, T4; Class I, Zone 2, Group IIC, T4; Suitable for Class II & III, Division 2, Groups E, F and G, T4; -40 °C ≤ Tamb ≤ +60 °C; Hazardous (Classified) Locations;

Indoor/Outdoor Enclosure TYPE 4X, IP67;

For Nonincendive Field Wiring parameters see control drawing 80395494.

2 Applicable standards

- FM Class 3600:1998 Electrical Equipment for Use in Hazardous (Classified) Locations - General Requirements
- FM Class 3610:2007 Intrinsically Safe Apparatus and Associated Apparatus for Use in Class I, II & III, Division 1, Hazardous (Classified) Locations
- FM Class 3611:2004 Nonincendive Electrical Equipment for Use in Class I & II, Division 2, and Class III, Divisions 1 & 2, Hazardous (Classified) Locations
- FM Class 3810:2005 Electrical Equipment for Measurement, Control and Laboratory Use
- ANSI/ISA-12.00.01(IEC 60079-0 Mod):1999 Electrical Apparatus for Use in Class I, Zones 0, 1 & 2 Hazardous (Classified) Locations - Part 0: General Requirements
- ANSI/ISA-12.02.01(IEC 60079-11 Mod):2002 Electrical Apparatus for Use in Class I, Zones 0, 1 & 2 Hazardous (Classified) Locations - Part 11: Intrinsic Safety "i"
- ANSI/ISA-82.02.01(IEC 61010-1 Mod):2004 Safety Requirements for Electrical Equipment for Measurement, Control, and Laboratory Use - Part 1: General Requirements
- ANSI/IEC 60529:2004 Degrees of Protection Provided by Enclosures (IP Code)
- ANSI/NEMA 250:1991 Enclosures for Electrical Equipment (1,000 Volts Maximum)

3 Instruction for safe use

3.1 Installations shall comply with the relevant requirements of the National Electrical Code® (ANSI/NFPA 70).

3.2 Installations shall comply with the latest edition of the manufacturer's instruction manual.

IS models shall be installed in accordance with control drawings 80395278, 80395279 and 80395280, and NI models shall be installed in accordance with control drawing 80395494.

3.3 The intrinsically safe associated apparatus must be FM Approvals approved.

3.4 Control room equipment connected to the associated apparatus should not use or generate more than 250 Vrms or VDC.

3.5 See ANSI/ISA RP12.06.01, Installation of Intrinsically Safe Systems for Hazardous (Classified) Locations, for guidance on the installation of intrinsically safe apparatus and systems.

3.6 Tampering and replacement with non-factory components may adversely affect the safe use of the system.

3.7 Insertion or withdrawal of removable electrical connectors is to be accomplished only when the area is known to be free of flammable vapors.

3.8 For ambient temperatures below -10 °C (+14 °F) and above +60 °C (+140 °F) use field wiring suitable for both minimum and maximum ambient temperatures.

3.9 Use copper, copper-clad aluminum or aluminum conductors only.

3.10 The recommended tightening torque for field wiring terminals is 0.8 N·m (7 in.·lb) or greater, as specified.

3.11 A dust-tight conduit seal shall be used when installed in Class II & III environments.

3.12 WARNING - SUBSTITUTION OF COMPONENTS MAY IMPAIR INTRINSIC SAFETY

3.13 WARNING - SUBSTITUTION OF COMPONENTS MAY IMPAIR SUITABILITY FOR DIVISIONS 1 & 2 AND ZONES 0, 1 & 2

3.14 WARNING - DO NOT DISCONNECT EQUIPMENT UNLESS AREA IS KNOWN TO BE NONHAZARDOUS

3.15 WARNING - FOR CONNECTION ONLY TO NON-FLAMMABLE PROCESSES

3.16 For the use in the area where EPL "Ga" apparatus is required, electrostatic discharge shall be avoided.

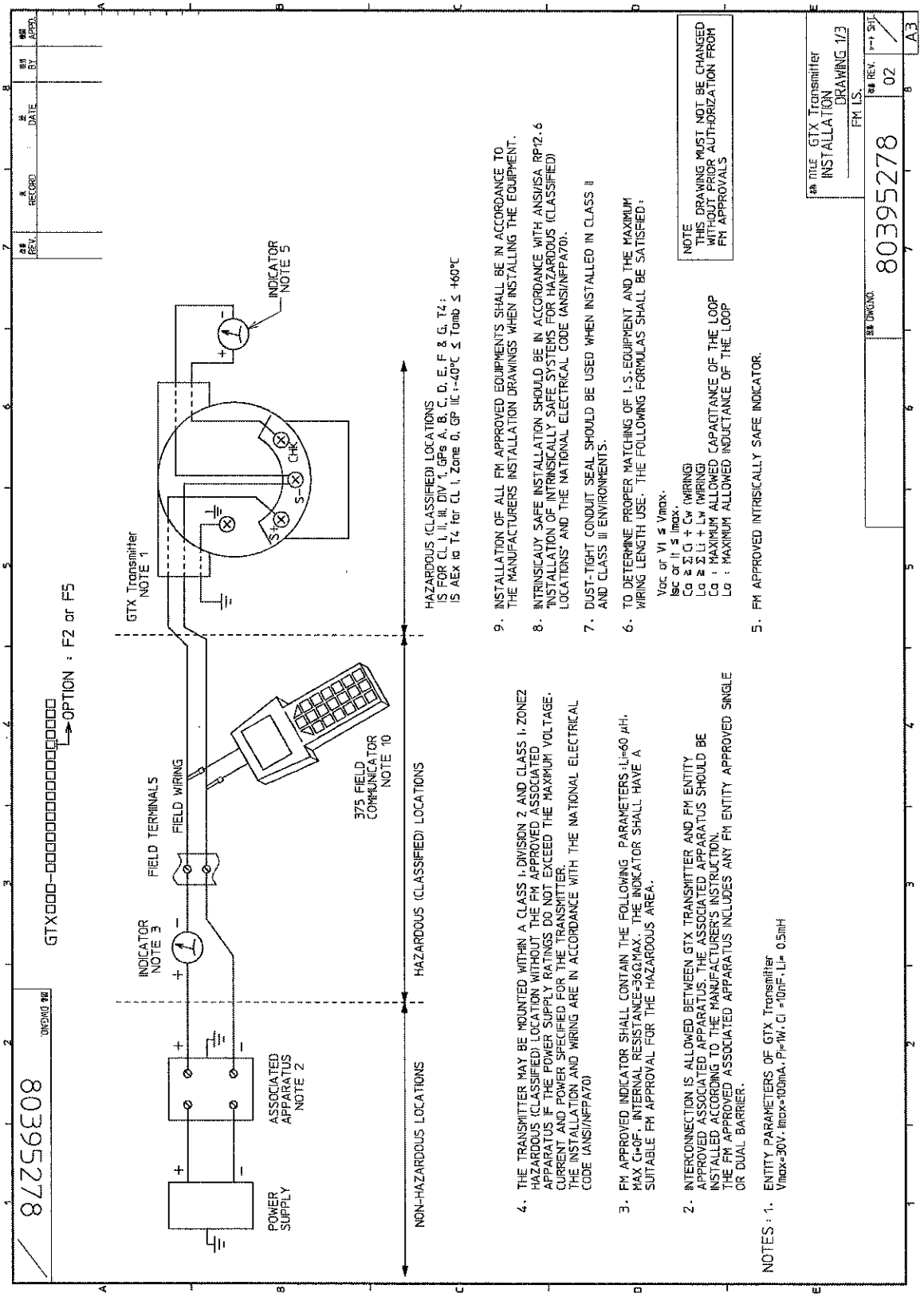
80395278
DWG.NO.
GTX000-0000000000000000
OPTION : F2 or F5
POWER SUPPLY
ASSOCIATED APPARATUS NOTE 2
INDICATOR NOTE 3
FIELD TERMINALS
FIELD WIRING
375 FIELD COMMUNICATOR NOTE 10
GTX Transmitter NOTE 1
INDICATOR NOTE 5
CHK
S-
S+
NON-HAZARDOUS LOCATIONS
HAZARDOUS (CLASSIFIED) LOCATIONS
HAZARDOUS (CLASSIFIED) LOCATIONS
IS FOR CL I, II, III, DIV 1, GPs A, B, C, D, E, F & G, T4 ;
IS AEx ia T4 for CL I, Zone 0, GP IIC ;-40°C ≤ Tamb ≤ +60°C
9. INSTALLATION OF ALL FM APPROVED EQUIPMENTS SHALL BE IN ACCORDANCE TO THE MANUFACTURERS INSTALLATION DRAWINGS WHEN INSTALLING THE EQUIPMENT.
8. INTRINSICALLY SAFE INSTALLATION SHOULD BE IN ACCORDANCE WITH ANSI/ISA RP12.6 "INSTALLATION OF INTRINSICALLY SAFE SYSTEMS FOR HAZARDOUS (CLASSIFIED) LOCATIONS" AND THE NATIONAL ELECTRICAL CODE (ANSI/NFPA70).
7. DUST-TIGHT CONDUIT SEAL SHOULD BE USED WHEN INSTALLED IN CLASS II AND CLASS III ENVIRONMENTS.
6. TO DETERMINE PROPER MATCHING OF I.S.EQUIPMENT AND THE MAXIMUM WIRING LENGTH USE: THE FOLLOWING FORMULAS SHALL BE SATISFIED:
Voc or Vt ≤ Vmax.
Isc or It ≤ Imax.
Ca ≥ ΣCi + Cw (WIRING)
La ≥ ΣLi + Lw (WIRING)
Ca : MAXIMUM ALLOWED CAPACITANCE OF THE LOOP
La : MAXIMUM ALLOWED INDUCTANCE OF THE LOOP
5. FM APPROVED INTRISICALLY SAFE INDICATOR.
NOTE
THIS DRAWING MUST NOT BE CHANGED WITHOUT PRIOR AUTHORIZATION FROM FM APPROVALS
4. THE TRANSMITTER MAY BE MOUNTED WITHIN A CLASS I, DIVISION 2 AND CLASS I, ZONE2 HAZARDOUS (CLASSIFIED) LOCATION WITHOUT THE FM APPROVED ASSOCIATED APPARATUS IF THE POWER SUPPLY RATINGS DO NOT EXCEED THE MAXIMUM VOLTAGE, CURRENT AND POWER SPECIFIED FOR THE TRANSMITTER. THE INSTALLATION AND WIRING ARE IN ACCORDANCE WITH THE NATIONAL ELECTRICAL CODE (ANSI/NFPA70)
3. FM APPROVED INDICATOR SHALL CONTAIN THE FOLLOWING PARAMETERS:Li=60 μH, MAX Ci=0F, INTERNAL RESISTANCE=36ΩMAX. THE INDICATOR SHALL HAVE A SUITABLE FM APPROVAL FOR THE HAZARDOUS AREA.
2. INTERCONNECTION IS ALLOWED BETWEEN GTX TRANSMITTER AND FM ENTITY APPROVED ASSOCIATED APPARATUS. THE ASSOCIATED APPARATUS SHOULD BE INSTALLED ACCORDING TO THE MANUFACTURER'S INSTRUCTION. THE FM APPROVED ASSOCIATED APPARATUS INCLUDES ANY FM ENTITY APPROVED SINGLE OR DUAL BARRIER.
NOTES : 1. ENTITY PARAMETERS OF GTX Transmitter
Vmax=30V, Imax=100mA, Pi=1W, Ci =10nF, Li= 0.5mH
TITLE GTX Transmitter INSTALLATION DRAWING 1/3
FM IS.
REV. 02
A3

REV.	RECORD	DATE	BY	APPD.

NOTES :

10. THE FM APPROVED 375 FIELD COMMUNICATOR MAY BE CONNECTED AT ANY POINT IN THE LOOP BETWEEN THE FM ENTITY APPROVED ASSOCIATED APPARATUS AND THE TRANSMITTER.
EXAMPLE OF ENTITY PARAMETERS OF THE COMMUNICATOR:
Vmax.=30V. Imax.=200mA. Pi=1W
Voc=1.9V. Isc=32 μA
Ci=0. Li=0

THE MAXIMUM ALLOWABLE CONNECTED INDUCTANCE (La) AND CAPACITANCE (Ca) OF THE LOOP MUST BE CONSIDERED WHEN USING THE COMMUNICATOR. (SEE SHEETS 3)

11. AEx ib IS SUITABLE ONLY FOR CLASS I. ZONE 1 HAZARDOUS (CLASSIFIED) LOCATIONS AND IS NOT SUITABLE FOR CLASS I. ZONE 0 or CLASS I. DIVISION1 HAZARDOUS (CLASSIFIED) LOCATIONS.

12. THE POWER SUPPLY CONNECTED TO THE ASSOCIATED APPARATUS MUST NOT USE OR GENERATE MORE THAN 250 Vrms OR Vdc.

CONSIDERATION OF AN INTRINSICALLY SAFE LOOP BASED ON ENTITY PARAMETERS

THE ENTITY CONCEPT ALLOWS INTERCONNECTION OF INTRINSICALLY SAFE APPARATUS TO ASSOCIATED APPARATUS NOT SPECIFICALLY EXAMINED IN SUCH COMBINATION.

BASICALLY, THE MAXIMUM UNPROTECTED CAPACITANCE (Ci) AND INDUCTANCE (Li) OF THE INTRINSICALLY SAFE APPARATUS, INCLUDING INTERCONNECTING WIRING PARAMETERS (Lw, Cw), MUST BE EQUAL TO OR LESS THAN THE CAPACITANCE (Ca) AND INDUCTANCE (La) WHICH CAN BE SAFELY CONNECTED TO THE ASSOCIATED APPARATUS. ALSO, THE MAXIMUM OUTPUT PARAMETERS (Voc, Isc, Po) OF THE ASSOCIATED APPARATUS MUST BE EQUAL TO OR LESS THAN THE MAXIMUM ENTITY PARAMETERS (Vmax, Imax, Pmax) OF THE INTRINSICALLY SAFE APPARATUS.

IF THE HHT IS CONNECTED TO THE INTRINSICALLY SAFE LOOP,
FURTHER CONSIDERATION MUST BE TAKEN AS SHOW BY THE FOLLOWING EXAMPLES.

TITLE GTX Transmitter
INSTALLATION
DRAWING 2/3
FM I.S.

DWG.NO. 80395279 | REV. 01 | SHT. / | A3

REV.	RECORD	DATE	BY	APPD.

Isum = Isc (ASSOCIATED APPARATUS) + Isc(375 FIELD COMMUNICATOR)

Vsum = Voc (ASSOCIATED APPARATUS) + Voc (375 FIELD COMMUNICATOR)

EXAMPLE 1. La

MAXIMUM OUTPUT CURRENT (Isum) TO THE LOOP IN THE WORST SITUATION IS THE SUM OF THE DELIVERED CURRENT (Isc) BY THE BARRIER AND THAT (Isc) BY THE HHT. IF Isc OF THE BARRIER IS 93mA.

Isum = 93mA + 0.032mA = 93.032mA.

THEN, BY APPLYING 100mA (THE NEXT HIGHER VALUE OF THE RESULTING Isum) TO THE RIGHT TABLE, La FOR GROUP A/B IS DETERMINED : La=4.00mH.

THE ABOVE OBTAINED La VALUE MUST SATISFY THE BELOW RELATIONSHIP.

La ≧ Li (TRANSMITTER) + Lw (WIRING) + Li (HHT).

ACCORDINGLY, THE WIRING INDUCTANCE NEVER EXCEEDS THE VALUE La - Li (TRANSMITTER) - Li (HHT), i.e. IF Li OF TRANSMITTER IS 0.308mH,

Lw ≦ 4.00mH - 0.308mH - 0 = 3.692mH

NOTE: IF THE ABOVE Lw VALUE IS SMALLER THAN THE INDUCTANCE OF A CABLE, ANOTHER BARRIER WITH A SMALLER Isc VALUE SHOULD BE SELECTED.

EXAMPLE 2. Ca

MAXIMUM OUTPUT VOLTAGE (Vsum) TO THE LOOP IN THE WORST SITUATION IS THE SUM OF THE DELIVERED VOLTAGE (Voc) BY THE BARRIER AND THAT (Voc) BY THE HHT. IF Voc OF THE BARRIER IS 28V.

Vsum = 28V + 1.9V = 29.9V.

THEN, BY APPLYING 30V (THE NEXT HIGHER VALUE OF THE RESULTING Vsum) TO THE RIGHT TABLE, Ca FOR GROUP A/B IS DETERMINED : Ca=0.12μF.
THE ABOVE OBTAINED Ca VALUE MUST SATISFY THE BELOW RELATIONSHIP.

Ca ≧ Ci (TRANSMITTER) + Cw (WIRING) + Ci (HHT).

ACCORDINGLY, THE WIRING CAPACITANCE NEVER EXCEEDS THE VALUE Ca - Ci (TRANSMITTER) - Ci (HHT), i.e. IF Ci OF TRANSMITTER IS 0.032μF,

Cw ≦ 0.12μF - 0.032μF - 0 = 0.088μF.

NOTE: IF THE ABOVE Cw VALUE IS SMALLER THAN THE CAPACITANCE OF A CABLE, ANOTHER BARRIER WITH A SMALLER Voc VALUE SHOULD BE SELECTED.

Isum (MILLI AMPERES)	La (MILLI HENRYS) A/B	C	D
20	90.00	330.00	700.00
21	82.00	300.00	635.30
23	68.00	250.00	530.10
25	58.00	210.00	449.00
28	46.00	170.00	358.40
30	40.00	150.00	312.40
32	36.00	135.00	274.80
35	31.00	110.00	229.90
40	23.00	87.00	176.30
45	19.00	70.00	139.40
50	15.00	56.00	113.10
55	12.00	48.00	93.50
57	11.00	43.00	87.10
60	10.00	40.00	78.70
62	9.50	37.00	73.70
65	8.80	34.00	67.10
70	7.50	28.00	57.90
75	6.70	25.00	50.50
80	6.00	22.00	44.40
85	5.50	20.00	39.30
90	5.00	18.00	35.10
100	4.00	15.00	28.50
110	3.00	12.00	23.60
120	2.50	10.00	19.80
130	2.00	9.00	16.90
140	1.60	8.00	14.60
150	1.30	7.00	12.70
160	1.00	6.20	11.20
170	0.80	5.50	9.90
180	0.60	5.00	8.80
200	0.50	4.00	7.20
220	0.40	3.20	5.90

Vsum (VOLTS)	Ca (MICROFARADS) A/B	C	D
5	91.97	275.91	735.77
10	3.21	9.64	25.69
15	0.78	2.35	6.26
20	0.34	1.01	2.7
22	0.26	0.78	2.09
24	0.21	0.63	1.67
26	0.17	0.51	1.37
28	0.14	0.43	1.14
30	0.12	0.36	0.97
32	0.11	0.32	0.84
34	0.09	0.28	0.73
36	0.08	0.24	0.65
38	0.08	0.22	0.58
40	0.06	0.19	0.52
42	0.06	0.18	0.47

TITLE GTX Transmitter INSTALLATION DRAWING 3/3 FM I.S.

DWG.NO. 80395280 REV. 01 SHT. / A3

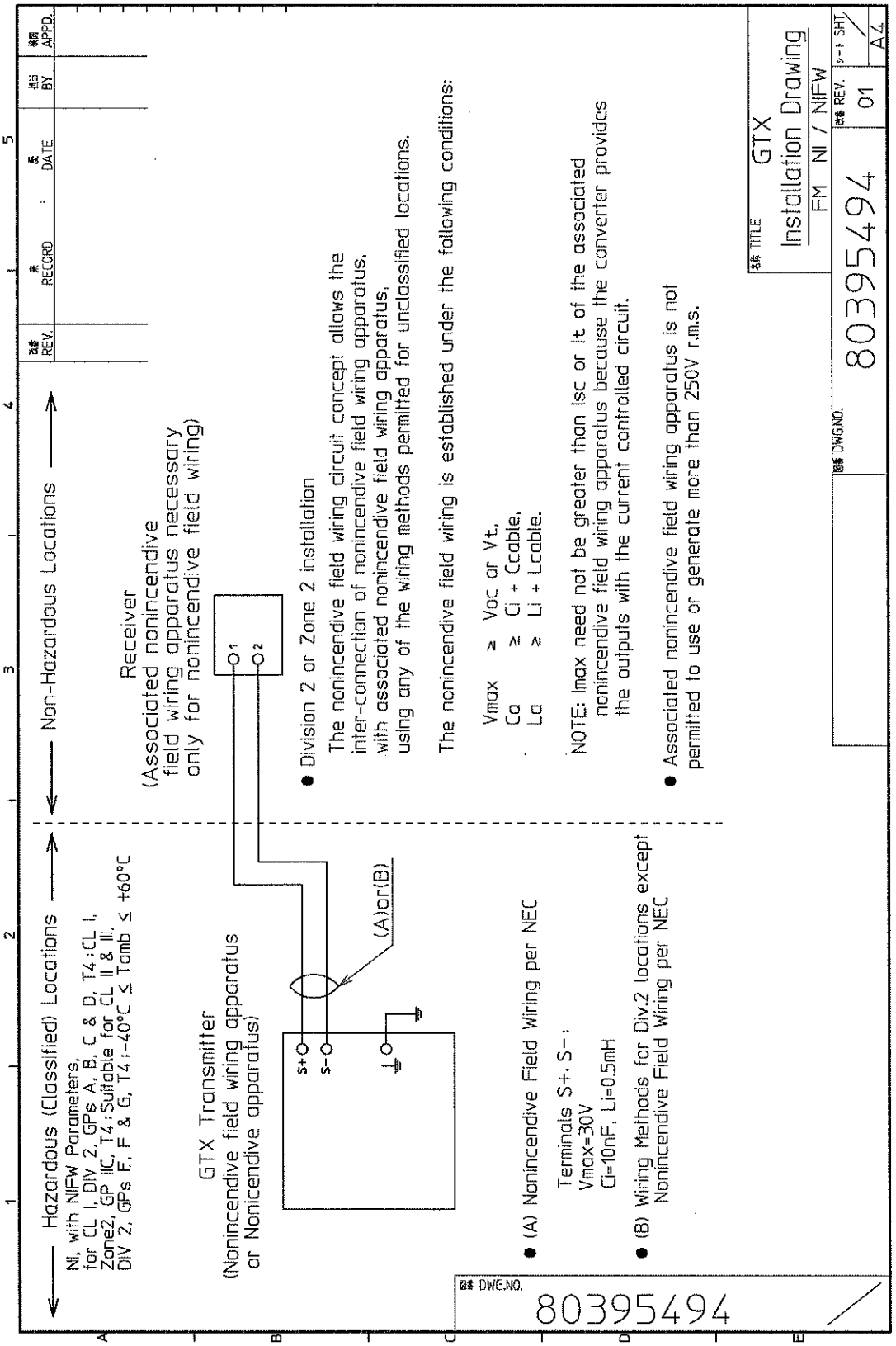
Hazardous (Classified) Locations
NI, with NIFW Parameters,
for CL I, DIV 2, GPs A, B, C & D, T4:CL I,
Zone2, GP IIC, T4:Suitable for CL II & III,
DIV 2, GPs E, F & G, T4:-40°C ≤ Tamb ≤ +60°C
Non-Hazardous Locations
GTX Transmitter
(Nonincendive field wiring apparatus
or Nonicendive apparatus)
S+
S-
(A)or(B)
Receiver
(Associated nonincendive
field wiring apparatus necessary
only for nonincendive field wiring)
1
2
● (A) Nonincendive Field Wiring per NEC
Terminals S+, S-:
Vmax=30V
Ci=10nF, Li=0.5mH
● (B) Wiring Methods for Div.2 locations except
Nonincendive Field Wiring per NEC
● Division 2 or Zone 2 installation
The nonincendive field wiring circuit concept allows the
inter-connection of nonincendive field wiring apparatus,
with associated nonincendive field wiring apparatus,
using any of the wiring methods permitted for unclassified locations.
The nonincendive field wiring is established under the following conditions:
Vmax ≥ Voc or Vt,
Ca ≥ Ci + Ccable,
La ≥ Li + Lcable.
NOTE: Imax need not be greater than isc or It of the associated
nonincendive field wiring apparatus because the converter provides
the outputs with the current controlled circuit.
● Associated nonincendive field wiring apparatus is not
permitted to use or generate more than 250V r.m.s.
DWG.NO.
80395494
TITLE
GTX
Installation Drawing
FM NI / NIFW
REV.
01
SHT.
A4
REV.
RECORD
DATE
BY
APPD.

FM Explosionproof / Dust-ignition proof Approval

⚠ CAUTION

· Install the apparatus only in areas for which the apparatus has been approved.
· Do not open the apparatus enclosure when an explosive atmosphere is present.

Marking information

Explosionproof for Class I, Division 1, Groups A, B, C and D; Class I, Zone 1, AEx d IIC

Dust-Ignitionproof for Class II, III, Division 1, Groups E, F and G

T5 -40°C ≤ Tamb ≤ +85°C

Hazardous locations

Indoor / Outdoor Type 4X, IP67

Factory sealed, conduit seal not required for Division applications

Caution - Use supply wires suitable for 5°C above surrounding ambient

Instruction for safe use

Installations shall comply with the relevant requirements of the National Electrical Code® (ANSI / FAPA 70).

ATEX Flameproof and Dust Certifications (English)

1. Marking information

CE 0344 Ex KEMA 08ATEX0004X

II 1/2 G Ex db IIC T6 Ga/Gb	-30°C ≤ Tamb ≤ +75°C	-30°C ≤$T_{PROCESS}$≤85℃
II 1/2 G Ex db IIC T5 Ga/Gb	-30°C ≤ Tamb ≤ +80°C	-30°C ≤$T_{PROCESS}$≤100℃
II 1/2 G Ex db IIC T4 Ga/Gb	-30°C ≤ Tamb ≤ +80°C	-30°C ≤$T_{PROCESS}$≤110℃
II 2 D Ex tb IIIC T85°C Db	-30°C ≤ Tamb ≤ +75°C	-30°C ≤$T_{PROCESS}$≤85℃
II 2 D Ex tb IIIC T100°C Db	-30°C ≤ Tamb ≤ +75°C	-30°C ≤$T_{PROCESS}$≤100℃
II 2 D Ex tb IIIC T110°C Db	-30°C ≤ Tamb ≤ +75°C	-30°C ≤$T_{PROCESS}$≤110℃

IP66/IP67

2. Applicable standards

- EN 60079-0: 2012+A11:2013
- EN 60079-1: 2014
- EN 60079-26: 2015
- EN 60079-31: 2014

3. Installation Instruction

3.1 To maintain the degree of protection of at least IP66 in accordance with IEC60529, suitable cable entries must be used and correctly installed. Unused openings must be closed with a suitable stopping plug.

3.2 Use supply wire suitable for 5℃ above surrounding ambient.

3.3 When Model No. is given with GTXxxx-x...x-yx...x-x...,
if y=A, the thread type of the end of all entries is 1/2 NPT, or
if y=B, the thread type of the end of all entries is M20.

3.4 The earthing wire and the cable lug shall be assembled and the earthing wire secured close to the cable lug to prevent it from being pulled sideways. The tightening torque of the earthing secure is 1.2±0.1N·m.

4. Specific conditions of use

4.1 The enclosure of the Model GTX is made of aluminum, so if it mounted in an area where the use of 1G apparatus is required, it must be installed in such a way that, even in the event of rare incidents, ignition sources due to impact of friction sparks are excluded.

4.2 For the use in the area where EPL Db apparatus is required, electrostatic discharge shall be avoided.

4.3 See Table 5-1 in the clause 5.1.2 for the material of the barrier diaphragm.
The barrier diaphragm shall not be subjected environmental conditions which might adversely affect the partition wall, for example corrosion.

4.4 Repairs of flameproof joints are allowed only by manufacturer.

4.5 The equipment must be returned to the manufacturer in case of failure.

4.6 The wetted parts with process fluid are suitable for EPL Ga and other parts are suitable for EPL Gb.

4.7 This product is specified for vibrating as follows.

-For the enclosure material
Amplitude:0.42 mm / Frequency:5 to 60 Hz
Amplitude:24.9 mm/s² (3G) / Frequency:60 to 200 Hz

- For the enclosure of material of stainless steel only for inline type
Amplitude:0.42 mm / Frequency:10 to 60 Hz
Amplitude:24.9 mm/s² (3G) / Frequency:60 to 2000 Hz

-For the enclosure of material other than stainless steel only for inline type
Amplitude:0.30 mm / Frequency:10 to 60 Hz
Amplitude:19.6 (2G) mm/s² (3G) / Frequency:60 to 500 Hz

ATEX Intrinsic safety (English)

1. Marking information

1.1 Intrinsic safety and Dust

CE 0344 Ex KEMA 07ATEX0200 X IP66/IP67

II 1 G Ex ia IIC T4 Ga -30°C ≤ Tamb ≤ +60°C
Tprocess = 105°C
ELECTRICAL PARAMETERS: Ui = 30 V, Ii = 93 mA,
Pi = 1 W, Ci = 5 nF, Li = 0.5 mH
II 1 D Ex ia IIIC T105°C Da -30°C ≤ Tamb ≤ +60°C
Tprocess = 105°C
II 3 G Ex ic IIC T4 Gc -30°C ≤ Tamb ≤ +60°C
Tprocess = 110°C
ELECTRICAL PARAMETERS: Ui = 30 V, Ci = 5 nF, Li = 0.5 mH

2. Applicable standards

EN 60079-0:2012, Electrical apparatus for explosive gas atmospheres - Part 0: General requirements

EN 60079-11:2012, Explosive atmospheres - Part 11: Equipment protection by intrinsic safety "i"

EN 60079-26:2007, Explosive atmospheres - Part 26: Equipment with equipment protection level (EPL) Ga

3. Instruction for safe use

3.1 To maintain the degree of protection of at least IP 66 in accordance with IEC 60529, suitable cable entries must be used and correctly installed. Unused openings must be closed with a suitable stopping plug.

3.2 Thread type of entry

When Model No.is given with GTXxxx-x ... x-yx ... x-x ...

If y=A, the thread type of entries is 1/2NPT, or

if y=B, the thread type of entries is M20.

4. Special conditions for safe use of intrinsic safety Ex ia (X certificate)

Because the enclosure of Model GTX is made of aluminium, if it is mounted in an area where the use of 1 G apparatus is required, it must be installed such, that, even in the event of rare incidents, ignition sources due to impact and friction sparks are excluded.

Certification ATEX de sécurité intrinsèque (Français)

1. Informations de marquage

1.1 Intrinsic safety and Dust

CE 0344 Ex KEMA 07ATEX0200 X IP66/IP67

II 1 G Ex ia IIC T4 Ga -30°C ≤ Tamb ≤ +60°C
TTRAITEMENT = 105°C
PARAMÈTRES ÉLECTRIQUES: Ui = 30 V, Ii = 93 mA,
Pi = 1 W, Ci = 5 nF, Li = 0.5 mH
II 1 D Ex ia IIIC T105°C Da -30°C ≤ Tamb ≤ +60°C
TTRAITEMENT = 105°C
II 3 G Ex ic IIC T4 Gc -30°C ≤ Tamb ≤ +60°C
TTRAITEMENT = 110°C
PARAMÈTRES ÉLECTRIQUES: Ui = 30 V, Ci = 5 nF, Li = 0.5 mH

2. Normes applicables

EN 60079-0:2012, Matériel électrique pour atmosphères explosives gazeuses - Partie 0: Règles générales

EN 60079-11:2012, Atmosphères explosives - Partie 11: Protection de l'équipement par sécurité intrinsèque "i"

EN 60079-26:2007, Atmosphères explosives - Partie 26: Matériel d'un niveau de protection du matériel (EPL) Ga

3. Instruction pour une utilisation sure

3.1 Afin de maintenir le degré de protection au moins d'IP 66 en accord avec la norme IEC 60529, les entrées de câble appropriées doivent être utilisées et correctement installées. Les ouvertures inutilisées doivent être obstruées avec les bouchons appropriés.

3.2 Type d'entrée de câble

Quand le numéro du modèle est donné avec GTXxxx-x ... x-yx ... x-x ...

Si y = A, le type d'entrée de câble est 1/2NPT, ou

si y = B, le type d'entrée de câble est M20.

4. Conditions spéciales pour une utilisation sûre de la sécurité intrinsèque Ex ia (certification X)

Puisque l'enveloppe du Modèle GTX est faite en aluminium, s'il est mis en place dans une zone où l'utilisation d'instrument 1 G est requise, il doit être installé de telle manière que même en cas d'incident rare les sources d'ignition dues aux impacts et frictions soient exclues.

ATEX-Bescheinigungen zu Eigensicherheit (Deutsch)

1. Kennzeichnungsinformationen

1.1 Eigensicherheit und Staub

CE 0344 Ex KEMA 07ATEX0200 X IP66/IP67

II 1 G Ex ia IIC T4 Ga -30°C ≤ Tumg ≤ +60°C
$T_{PROZESS}$ = 105°C
ELEKTRISCHE PARAMETER: Ui = 30 V, Ii = 93 mA,
Pi = 1 W, Ci = 5 nF, Li = 0.5 mH
II 1 D Ex ia IIIC T105°C Da -30°C ≤ Tumg ≤ +60°C
$T_{PROZESS}$ = 105°C
II 3 G Ex ic IIC T4 Gc -30°C ≤ Tumg ≤ +60°C
$T_{PROZESS}$ = 110°C
ELEKTRISCHE PARAMETER: Ui = 30 V, Ci = 5 nF, Li = 0.5 mH

2. Gültige Normen

EN 60079-0:2012, Elektrische Betriebsmittel für gasexplosionsgefährdete Bereiche - Teil 0: Allgemeine Anforderungen

EN 60079-11:2012, Explosionsfähige Atmosphäre - Teil 11: Geräteschutz durch Eigensicherheit "i"

EN 60079-26:2007, Explosionsfähige Atmosphäre - Teil 26: Betriebsmittel mit Geräteschutzniveau (EPL) Ga

3. Installationsanleitungen für sicheren Gebrauch

3.1 Zur Beibehaltung eines Schutzgrades von mindestens IP 66 gemäß IEC 60529 sind geeignete Kabeldurchführungen zu verwenden und vorschriftsmäßig zu installieren. Nicht verwendete Öffnungen sind mit einem geeigneten Abdeckstopfen zu verschließen.

3.2 Gewindetyp der Durchführungen

Für Modellnummern mit GTXxxx-x ... x-yx ... x-x ...

Bei y = A ist der Gewindetyp der Durchführungen ½" NPT, oder

bei y = B ist der Gewindetyp der Durchführungen M20.

4. Spezielle Bedingungen für den sicheren Gebrauch der Eigensicherheit Ex ia (X-Bescheinigung)

Da das Gehäuse des Modells GTX aus Aluminium besteht, muss es bei Anbringung in Bereichen, für die die Verwendung eines 1 G Geräts erforderlich ist, so installiert werden, dass bei einer selten auftretenden Störung Zündquellen aufgrund von Funkenbildung durch Stöße oder Reibung ausgeschlossen sind.

Certificacion ATEX de seguridad intrínseca (Español)

1. Información de marca

1.1 Seguridad intrínseca y polvo

CE 0344 Ex KEMA 07ATEX0200 X IP66/IP67

II 1 G Ex ia IIC T4 Ga -30°C ≤ Tamb ≤ +60°C
$T_{PROCESO}$ = 105°C
PARÁMETROS ELÉCTRICOS: Ui = 30 V, Ii = 93 mA,
Pi = 1 W, Ci = 5 nF, Li = 0.5 mH
II 1 D Ex ia IIIC T105°C Da -30°C ≤ Tamb ≤ +60°C
$T_{PROCESO}$ = 105°C
II 3 G Ex ic IIC T4 Gc -30°C ≤ Tamb ≤ +60°C
$T_{PROCESO}$ = 110°C
PARÁMETROS ELÉCTRICOS: Ui = 30 V, Ci = 5 nF, Li = 0,5 mH

2. Estándares aplicables

EN 60079-0:2012, Material eléctrico para atmósferas de gas explosivas - Parte 0: Requisitos generales

EN 60079-11:2012, Atmósferas explosivas - Parte 11: Protección del equipo por seguridad intrínseca "i"

EN 60079-26:2007, Atmósferas explosivas - Parte 26: Material con nivel de protección de material (EPL) Ga

3. Instrucción de instalación para el uso seguro

3.1 Para mantener el grado de protección de al menos IP 66 de conformidad con la norma IEC 60529, se debe utilizar e instalar correctamente las entradas de cable adaptadas. Se debe cerrar las aberturas no utilizadas con un tapón de parada adaptado.

3.2 Tipo de rosca de entrada

Cuando se indica el nº de modelo como GTXxxx-x ... x-yx ... x-x ...

Si y = A, el tipo de rosca de las entradas es 1/2NPT, o

si y = B, el tipo de rosca de las entradas es M20..

4. Condiciones especiales para un uso seguro de Ex ia de seguridad intrínseca (certificado X)

Como la envolvente del modelo GTX está hecha de aluminio, si ésta está montada en un área en la que necesite utilizar material 1 G, se le debe instalar de tal manera que, incluso en caso de incidente raro, se excluya las fuentes de ignición debidas a chispas de impacto y fricción.

Certificazioni ATEX Sicurezza intrinseca (Italiano)

1. Marchi informativi

1.1 Sicurezza intrinseca e Polvere

CE 0344 Ex KEMA 07ATEX0200 X IP66/IP67

II 1 G Ex ia IIC T4 Ga -30°C ≤ Tamb ≤ +60°C
$T_{PROCESSO}$ = 105°C
PARAMETRI ELETTORICI: Ui = 30 V, Ii = 93 mA,
Pi = 1 W, Ci = 5 nF, Li = 0.5 mH
II 1 D Ex ia IIIC T105°C Da -30°C ≤ Tamb ≤ +60°C
$T_{PROCESSO}$ = 105°C
II 3 G Ex ic IIC T4 Gc -30°C ≤ Tamb ≤ +60°C
$T_{PROCESSO}$ = 110°C
PARAMETRI ELETTORICI: Ui = 30 V, Ci = 5 nF, Li = 0.5 mH

2. Standard applicabili

EN 60079-0:2012, Costruzioni elettriche per atmosfere esplosive per la presenza di gas - Parte 0: Regole generali

EN 60079-11:2012, Costruzioni elettriche per atmosfere esplosive per la presenza di gas - Parte 11: Apparecchiature con modo di protezione a sicurezza intrinseca "i"

EN 60079-26:2007, Costruzioni elettriche per atmosfere esplosive per la presenza di gas - Parte 26: Apparecchiature con livello di protezione (EPL) Ga

3. Istruzioni per un uso sicuro

3.1 Per mantenere il grado di protezione di almeno IP 66 in conformità con la norma IEC 60529, è necessario utilizzare ingressi di cavo adatti correttamente installati. Le aperture non utilizzate devono essere chiuse con un apposito tappo.

3.2 Passo filetto d'ingresso

Quando il Modello N. viene fornito con GTXxxx-x ... x-yx ... x-x ...

Se y = A, il passo filetto d'ingresso è 1/2NPT, oppure

Se y = B, il passo filetto d'ingresso è M20.

4. Condizioni speciali per un uso sicuro di sicurezza intrinseca Ex ia (certificato X)

4. Condizioni speciali per un uso sicuro di sicurezza intrinseca Ex ia (certificato X)

Poiché l'involucro del Model GTX è realizzato in alluminio, se viene montato in un'area dove è richiesto l'uso di un apparato 1 G, deve essere installato in modo tale che, anche nel caso di rari incidenti, siano escluse fonti di ignizione dovute a scintilla da impatto o da frizione.

ATEX Certificeringen intrinsieke veiligheid (Dutch)

1. Markeringinformatie

1.1 Intrinsieke veiligheid en stof

CE 0344 Ex KEMA 07ATEX0200 X IP66/IP67

II 1 G Ex ia IIC T4 Ga -30°C ≤ Tamb ≤ +60°C
$T_{PROCESS}$ = 105°C
ELEKTRISCHE PARAMETERS: Ui = 30 V, Ii = 93 mA,
Pi = 1 W, Ci = 5 nF, Li = 0.5 mH
II 1 D Ex ia IIIC T105°C Da -30°C ≤ Tamb ≤ +60°C
$T_{PROCESS}$ = 105°C
II 3 G Ex ic IIC T4 Gc -30°C ≤ Tamb ≤ +60°C
$T_{PROCESS}$ = 110°C
ELEKTRISCHE PARAMETERS: Ui = 30 V, Ci = 5 nF, Li = 0.5 mH

2. Toepasselijke normen

EN 60079-0:2012, Elektrische materieel voor plaatsen waar gasontploffingsgevaar kan heersen - Deel 0: Algemene eisen

EN 60079-11:2012, Explosieve atmosferen - Deel 11: Bescherming van materieel door intrinsieke veiligheid "i"

EN 60079-26:2007, Explosieve atmosferen - Deel 26: Materieel met materieelbeschermingsniveau (EPL) Ga

3. Instructie voor veilig gebruik

3.1 Om een beschermingsgraad van ten minste IP 66 te behouden, in overeenstemming met IEC 60529, moeten geschikte kabelinvoeren worden gebruikt en correct worden geÔnstalleerd. Ongebruikte openingen moeten worden afgesloten met een geschikte afsluitdop.

3.2 Schroefdraadtype ingang

Als modelnr. wordt gegeven met GTXxxx-x ... x-yx ... x-x ...

Als y = A, is het schroefdraadtype van de ingangen 1/2NPT, of

als y = B, is het schroefdraadtype van de ingangen M20.

4. Speciale voorwaarden voor veilig gebruik van intrinsieke veiligheid Ex ia (X certificaat)

Omdat de behuizing van model GTX van aluminium is, moet het bij montage op een plaats waar het gebruik van 1 G-apparaten verplicht is, zo worden geÔnstalleerd dat zelfs in geval van zeldzame incidenten een ontstekingsbron door vonken bij een botsing of door wrijving is uitgesloten.

Certificaçõ ATEX de Segurança intrínseca (Português)

1. Informações de marcação

1.1 Segurança intrínseca e Poeira

CE 0344 Ex KEMA 07ATEX0200 X IP66/IP67

II 1 G Ex ia IIC T4 Ga -30°C ≤ Tamb ≤ +60°C
$T_{PROCESSO}$ = 105°C
PARÂMETROS ELÉTRICOS: Ui = 30 V, Ii = 93 mA,
Pi = 1 W, Ci = 5 nF, Li = 0.5 mH
II 1 D Ex ia IIIC T105°C Da -30°C ≤ Tamb ≤ +60°C
$T_{PROCESSO}$ = 105°C
II 3 G Ex ic IIC T4 Gc -30°C ≤ Tamb ≤ +60°C
$T_{PROCESSO}$ = 110°C
PARÂMETROS ELÉTRICOS: Ui = 30 V, Ci = 5 nF, Li = 0.5 mH

2. Normas aplicáveis

EN 60079-0:2012, Material eléctrico para atmosferas explosivas - Parte 0: Requisitos gerais

EN 60079-11:2012, Atmosferas explosivas - Parte 11: Protecção do equipamento por segurança intrínseca "i"

EN 60079-26:2007, Atmosferas explosivas - Parte 26: Equipamento com um nível de protecção do equipamento (EPL) Ga

3. Instrução para utilização segura

3.1 Para manter o grau de protecção de pelo menos IP 66 de acordo com IEC 60529, precisa-se utilizar e instalar correctamente as entradas de cabo adequadas. As aberturas não utilizadas precisam ser fechadas com tampão de paragem adequado.

3.2 Tipo de filete de entrada

Quando o No. de Modelo é dado com GTXxxx-x ... x-yx ... x-x ...

Se y = A, o tipo de filete de entradas é 1/2NPT, ou

se y = B, o tipo de filete de entradas é M20.

4. Condições especiais para utilização segura da segurança intrínseca Ex ia (certificado X)

Como o invólucro do Modelo GTX é feito de alumínio, se estiver montado numa área em que a utilização de da aparelhagem 1 G for necessária, precisa ser instalada de forma tal que, mesmo no caso de raros incidentes, ficam excluídas as fontes de ignição devido às faíscas de impacto e de atrito.

IECEx Flameproof and Dust Certifications (English)

1. Marking information

IECEx KEM 08.0001X

Ex db IIC T6 Ga/Gb -30°C ≤ Tamb ≤ +75°C -30°C ≤$T_{PROCESS}$≤85℃

Ex db IIC T5 Ga/Gb -30°C ≤ Tamb ≤ +80°C -30°C ≤$T_{PROCESS}$≤100℃

Ex db IIC T4 Ga/Gb -30°C ≤ Tamb ≤ +80°C -30°C ≤$T_{PROCESS}$≤110℃

Ex tb IIIC T85°C Db -30°C ≤ Tamb ≤ +75°C -30°C ≤$T_{PROCESS}$≤85℃

Ex tb IIIC T100°C Db -30°C ≤ Tamb ≤ +75°C -30°C ≤$T_{PROCESS}$≤100℃

Ex tb IIIC T110°C Db -30°C ≤ Tamb ≤ +75°C -30°C ≤$T_{PROCESS}$≤110℃

IP66/IP67

2. Applicable standards

- IEC 60079-0: 2011
- IEC 60079-1: 2014
- IEC 60079-26: 2014
- IEC 60079-31: 2014

3. Installation Instruction

3.1 To maintain the degree of protection of at least IP66 in accordance with IEC60529, suitable cable entries must be used and correctly installed. Unused openings must be closed with a suitable stopping plug.

3.2 Use supply wire suitable for 5℃ above surrounding ambient.

3.3 When Model No. is given with GTXxxx-x...x-yx...x-x...,
if y=A, the thread type of the end of all entries is 1/2 NPT, or
if y=B, the thread type of the end of all entries is M20

3.4 The earthing wire and the cable lug shall be assembled and the earthing wire secured close to the cable lug to prevent it from being pulled sideways. The tightening torque of the earthing secure is 1.2±0.1N·m.

4. Specific conditions of use

4.1 The enclosure of the Model GTX is made of aluminum, so if it mounted in Zone 0, where the use of Ga apparatus is required, it must be installed in such a way that, even in the event of rare incidents, ignition sources due to impact of friction sparks are excluded.

4.2 For the use in the area where EPL Db apparatus is required, electrostatic discharge shall be avoided.

4.3 See Table 5-1 in the clause 5.1.2 for the material of the barrier diaphragm.
The barrier diaphragm shall not be subjected environmental conditions which might adversely affect the partition wall, for example corrosion.

4.4 Repairs of flameproof joints are allowed only by manufacturer.

4.5 The equipment must be returned to the manufacturer in case of failure.

4.6 The wetted parts with process fluid are suitable for EPL Ga and other parts are suitable for EPL Gb.

4.7 This product is specified for vibrating as follows.

-For the enclosure material
Amplitude:0.42 mm / Frequency:5 to 60 Hz
Amplitude:24.9 mm/s² (3G) / Frequency:60 to 200 Hz

- For the enclosure of material of stainless steel only for inline type
Amplitude:0.42 mm / Frequency:10 to 60 Hz
Amplitude:24.9 mm/s² (3G) / Frequency:60 to 2000 Hz

-For the enclosure of material other than stainless steel only for inline type
Amplitude:0.30 mm / Frequency:10 to 60 Hz
Amplitude:19.6 (2G) mm/s² (3G) / Frequency:60 to 500 Hz

IECEx Intrinsic safety

1. Marking information

1.1 Intrinsic safety and Dust

IECEx KEM 07.0058X IP66/IP67
Ex ia IIC T4 Ga -30°C ≤ Tamb ≤ +60°C
Tprocess = 105°C
ELECTRICAL PARAMETERS: Ui = 30 V, Ii = 93 mA,
Pi = 1 W, Ci = 5 nF, Li = 0.5 mH
Ex ia IIIC T105°C Da -30°C≤Tamb ≤ +60°C
Tprocess = 105°C
Ex ic IIC T4 Gc -30°C≤Tamb ≤ +60°C
Tprocess = 110°C
ELECTRICAL PARAMETERS: Ui = 30 V, Ci = 5 nF,
Li = 0.5 mH

2. Applicable standards

- IEC 60079-0:2011 Electrical apparatus for explosive gas atmospheres - Part 0: General requirements
- IEC 60079-11:2011 Explosive atmospheres - Part 11: Equipment protection by intrinsic safety "i"
- IEC 60079-26:2006 Explosive atmospheres - Part 26: Equipment with equipment protection level (EPL) Ga

3. Instruction for safe use

3.1 To maintain the degree of protection of at least IP 66 in accordance with IEC 60529, suitable cable entries must be used and correctly installed. Unused openings must be closed with a suitable stopping plug.

3.2 Thread type of entry

When Model No.is given with GTXxxx-x ... x-yx ... x-x ...
If y=A, the thread type of entries is 1/2NPT, or if y=B, the thread type of entries is M20.

4. Special conditions for safe use of intrinsic safety Ex ia (X certificate)

Because the enclosure of Model GTX is made of aluminium, if it is mounted in an area where the use of 1 G apparatus is required, it must be installed such, that, even in the event of rare incidents, ignition sources due to impact and friction sparks are excluded.

NEPSI Flameproof and Dust Certifications

AT9000 Advanced Transmitter type GTX Series, manufactured by Azbil Corporation, has been approved by National Supervision and Inspection Center for Explosion Protection and Safety of Instrumentation (NEPSI) in accordance with the following standards:

GB3836.1 - 2010 Electrical apparatus for explosive gas atmospheres
Part 1: General requirements

GB3836.2 - 2010 Electrical apparatus for explosive gas atmospheres
Part 2: Flameproof enclosure "d"

GB12476.1 - 2000 Electrical apparatus for use in the presence of combustible dust

Part A-1: Electrical apparatus protected by enclosures and surface temperature limitation - Specification for apparatus

Transmitters are approved with Ex marking of Ex d IIC T4~T6; DIP A21 T_A85°C / DIP A21 T_A100°C / DIP A21 T_A115°C. The certificate number is GYJ12.1019X

1. REQUIREMENTS FOR SAFE USE

1.1 The external earthing terminal shall be connected to the ground reliably at site.

1.2 The relationships between Ex marking, ambient temperature range and the maximum process temperature are shown below:

Ex marking	Ambient temperature range	Maximum process temperature
Ex d IIC T6DIP A21 T_A85°C	-30°C ~ +75°C	80°C
Ex d IIC T5DIP A21 T_A100°C	-30°C ~ +80°C	95°C
Ex d IIC T4DIP A21 T_A115°C	-30°C ~ +80°C	110°C

1.3 The cable entry holes have to be connected by means of suitable cable entries with type of protection of Ex d IIC. The cable entries shall be approved by NEPSI in accordance with GB3836.A-2000, GB3836.2-2000 and GB12476.A-2000, which are covered by a separate examination certificate. The screws of the cable entries shall be 1/2-14NPT. Unwanted entry holes shall be blocked by blind plugs. After installation of the cable entry, the whole apparatus shall reach IP66/IP67.

1.4 The warning "Do not open while the circuit is alive" must be obeyed when the product is used in the explosive gas area.

1.5 Rated supply voltage: 10.8 ~ 42Vd.c. or 9 ~ 32Vd.c.

1.6 End users are forbidden to change the configuration to ensure the explosion protection performance of the product.

1.7 Regular cleanness shall be conducted to avoid the deposit of the dust.

1.8 When installation, operation and maintenance the product, users should comply with the relevant requirements of the product instruction manual and the following standards:

GB3836.13-1997 "Electrical apparatus for explosive gas atmospheres Part 13: Repair and overhaul for apparatus used in explosive gas atmospheres"

GB3836.15-2000 "Electrical apparatus for explosive gas atmospheres- Part 15: Electrical installations in hazardous area (other than mines)"

GB3836.16-2006 "Electrical apparatus for explosive gas atmospheres Part 16: Inspection and maintenance of electrical installation (other than mines)".

GB50257-1996 "Code for construction and acceptance of electric device for explosion atmospheres and fire hazard electrical equipment installation engineering"

GB12476.2-2010 "Electrical apparatus for use in the presence of combustible dust Part A-1: Electrical apparatus protected by enclosures and surface temperature limitation-Selection, installation and maintenance"

GB15577-1995 "Safety regulations for the protection of dust explosion".

NEPSI Intrinsic Safety Certification

AT9000 Advanced Transmitter type GTX Series, manufactured by Azbil Corporation, has been approved by National Supervision and Inspection Center for Explosion Protection and Safety of Instrumentation (NEPSI) in accordance with the following standards:

GB3836.1 - 2010	Electrical apparatus for explosive gas atmospheres Part 1: General requirements
GB3836.4 - 2010	Electrical apparatus for explosive gas atmospheres Part 4: Intrinsic safety "i"
GB3836.8 - 2003	Electrical apparatus for explosive gas atmospheres Part 8: Type of protection "n"
GB 3836.20 - 2010	Explosive Atmosphere Part 20: Equipment with Equipment Protection Level (EPL) of Ga

Transmitters is approved with Ex marking of Ex ia IIC T4 Ga; Ex nL IIC T4 Gc. The certificate number is GYJ12.1020X.

1.REQUIREMENTS FOR SAFE USE

1.1 The relationships between Ex marking, ambient temperature range and maximum process temperature are shown in the table below:

Ex marking	Ambient temperature range	Maximum process temperature
Ex ia IICT4	-40°C ~ +60°C	105°C
Ex nL IICT4	-40°C ~ +60°C	110°C

1.2 Only be connected to a certified associated apparatus or a certified associated energy-limited apparatus, the product could be used in the explosive atmosphere. The connection shall be accordance with the requirements of the manual of the associated apparatus and the product.

1.2.1 Intrinsically safe parameters:

Max. input Voltage Ui (V)	Max. input current Ii (mA)	Max. input power Pi (W)	Max. internal parameter	
			Ci (nF)	Li (mH)
30	100	1	13	0.5

1.2.2 The cable with shield is suitable for connection, the cross-sectional area of the wire shall be at least 0.5 mm^2, and the shield shall be connected to the earth in the non-hazardous area.

1.3 End users are forbidden to change the configuration to ensure the explosion protection performance of the product.

Chapter 1 : Overview-First Time Users Only

Chapter 2 : Installation

Chapter 3 : Operation of the Transmitter

Chapter 4 : Operation Using HART® Communicator

Chapter 5 : Maintenance

Chapter 6: Troubleshooting

Appendix A - Supplement Manual for CommStaff

Chapter 1 : Overview-First Time Users Only

1.1 : Introduction

This section is intended for users who have never worked with our AT9000 Advanced Transmitter. It provides some general information to acquaint you with the AT9000 Advanced Transmitter.

1.2 : AT9000 Advanced Transmitters

Azbil Corporation's AT9000 Advanced Transmitter includes model variations of these basic pressure measurement types.

- Differential Pressure
- Gauge Pressure
- Absolute Pressure

Transmitter adjustments

Except for optional zero and span adjustments available with AT9000 Advanced Transmitters only, the AT9000 Advanced Transmitter has no physical adjustments.

You need a CommPad or HART® 375 communicator to make adjustments to a AT9000 Advanced Transmitter

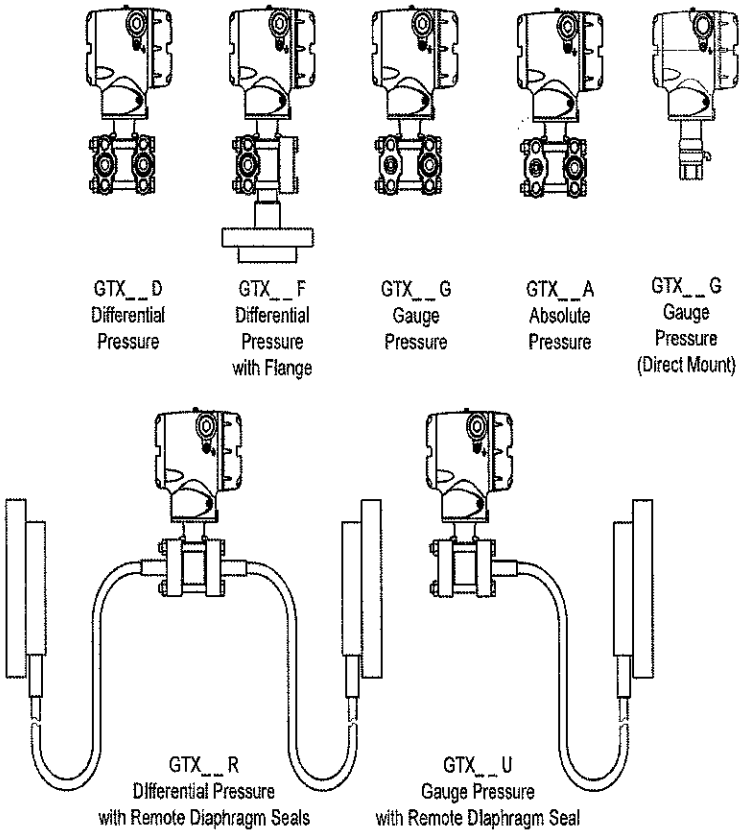

Figure 1-1 AT9000 Advanced Transmitter Family

1.3 : Parts names of the transmitter

Introduction

This transmitter consists mainly of a terminal block, an electronics module, a transmitter unit case, an indicator, and a center body.

Structure and parts names

The following illustration shows the structure and parts names of this transmitter:

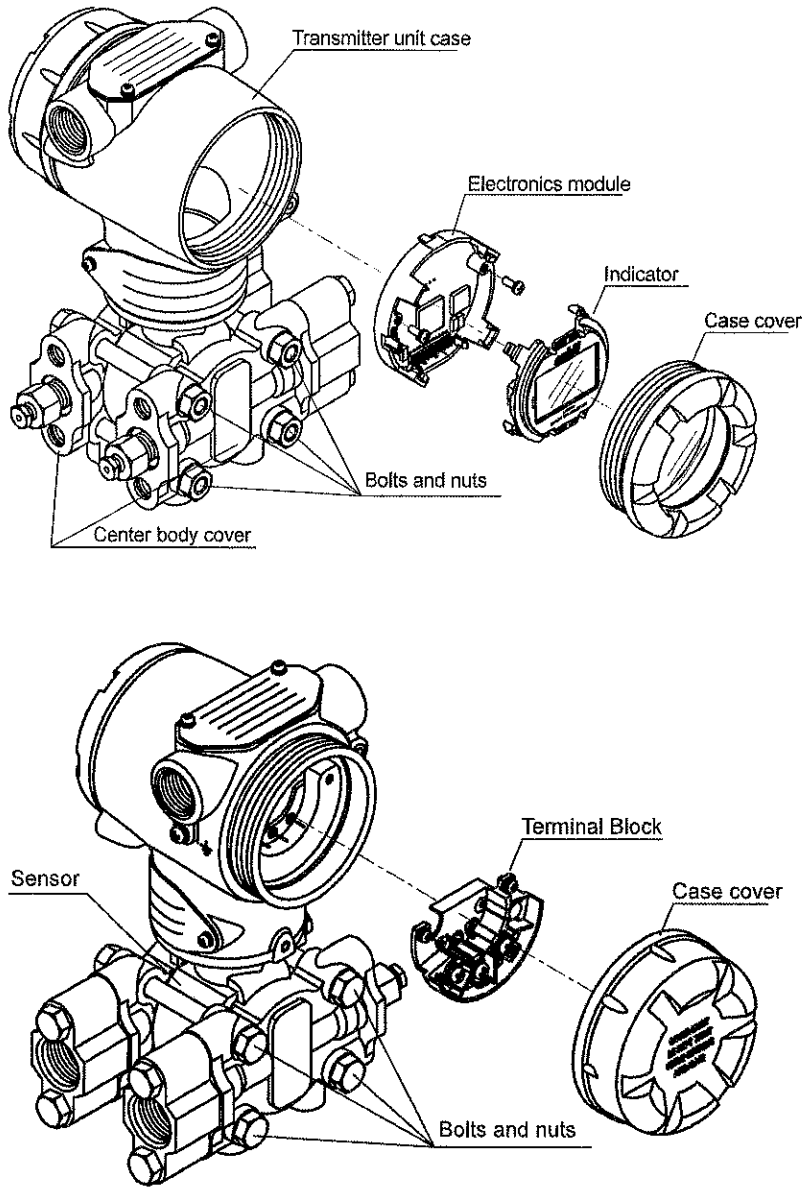

Figure 1-2 Structure of the transmitter (model GTX __D)

Parts name	Description
Center body	Consists of a composite semiconductor sensor, a pressure diaphragm, an excessive pressure protection mechanism, etc.
Center body cover	Two center body covers sandwich the center body. Process connection is made to this part.
Bolts and nuts	Fixing the center body between covers, are a series of bolts and nuts.
Sensor	Consists of a composite semiconductor sensor, a pressure receiving diaphragm, a flange, a capillary tube, etc.
Electronics module	Consists of electronic circuits having functions for processing differential pressure and other signals, and transmitting them.
Transmitter unit case	Housing the electronics module and the terminal board.
Case cover	Encloses the transmitter unit case.
Indicator	It display output value, unit, error message, etc.

1.4 : Transmitter Order

Order components

Figure 1-3 shows the components that are shipped and should be received for a typical AT9000 Advanced Transmitter order.

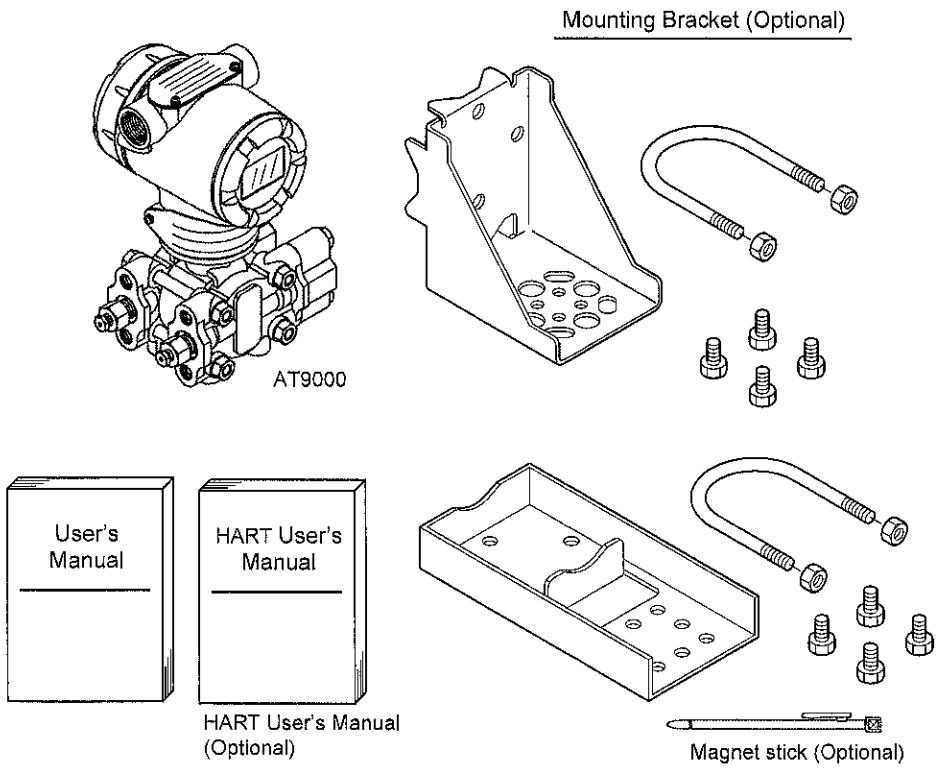

Figure 1-3 Typical AT9000 Advanced Transmitter Order Components

Chapter 2 : Installation

2.1 : Introduction

This section provides information about installing the AT9000 Advanced Transmitter.

It includes procedures for mounting, piping and wiring the transmitter for operation.

2.2 : Mounting AT9000 Advanced Transmitter

Summary

You can mount all transmitter models except those with integral flanges to a 2-inch (50 mm) vertical or horizontal pipe using our optional angle or flat mounting bracket or a bracket of your own. Those models with integral flanges are supported by the flange connection.

Figure 2-1 shows typical bracket mounted and flange mounted transmitter installations for comparison.

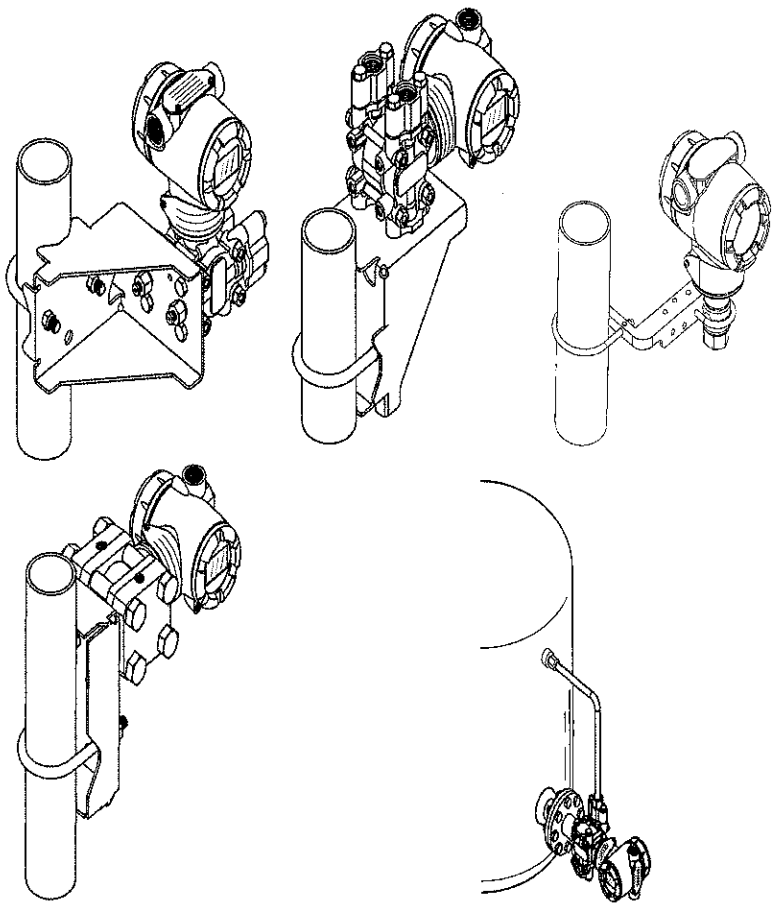

Figure 2-1 Typical Bracket Mounted and Flange Mounted Installations.

Methods of changing direction of indicator after mounting are shown below.

a) Rotate electronics housing 90° horizontally.

Loosen 3 mm set screw on outside neck of transmitter. Rotate electronics housing in a maximum of 90 degree increments (left or right) from the center to a position you require and tighten the set screw.

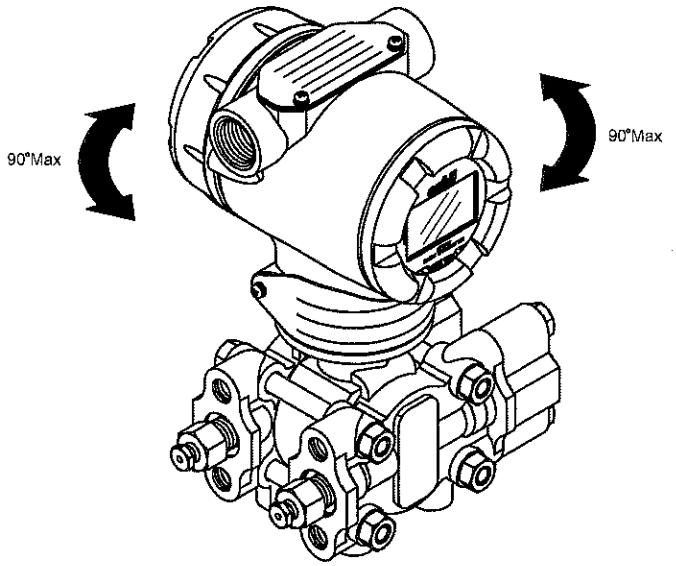

Figure 2-2

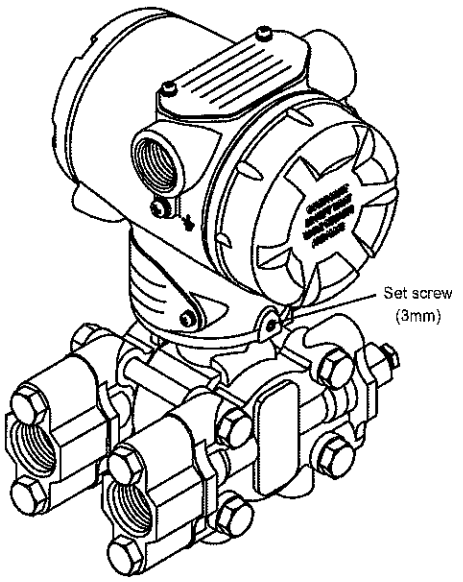

Figure 2-3

b) Rotate digital display module

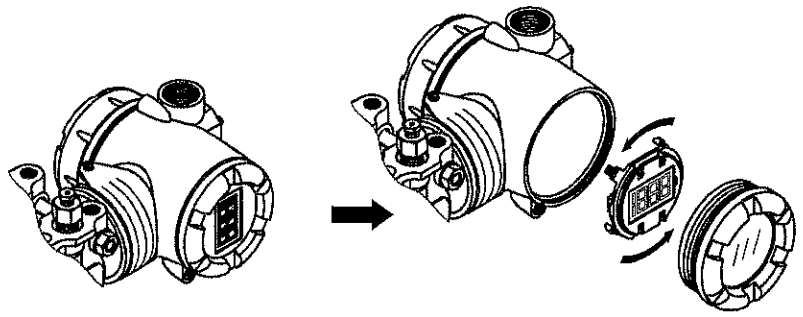

Figure 2-4

Flange mounting

To mount a flange mounted transmitter model, bolt the transmitter's flange to the flange pipe on the wall of the tank. Tighten the bolts to a torque of

SNB7 : 20 ± 1 $N \bullet m$

304SST : 10 ± 1 $N \bullet m$

ATTENTION

On insulated tanks, remove enough insulation to accommodate the flange extension.

Figure 2-5 shows a typical installation for a transmitter with the flange on the high pressure (HP) side so the HP diaphragm is in direct contact with the process fluid. The low pressure (LP) side of the transmitter is vented to atmosphere (no connection).

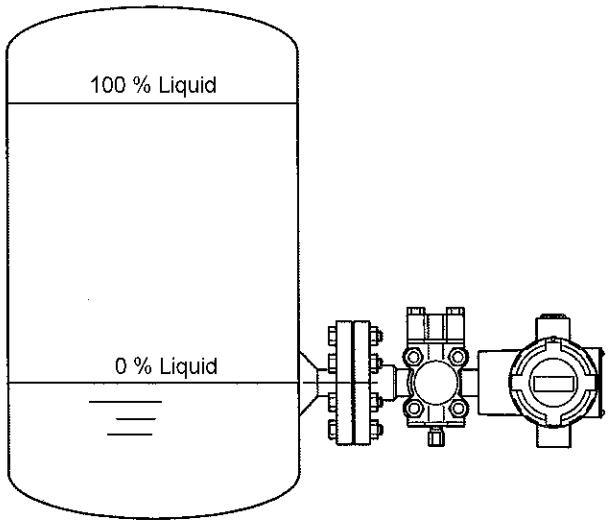

Figure 2-5 Typical Flange Mounted Transmitter Installation.

Remote seal mounting

Use the procedure in "Table 2-1Mounting Remote Diaphragm Seal Transmitter" to mount a remote diaphragm seal transmitter model. Figure 2-6 shows a typical installation for a remote diaphragm seal transmitter for reference.

ATTENTION

Mount the transmitter flanges within the limits stated here for the given fill-fluid in the capillary tubes with a tank at one atmosphere.

Table 2-1 Mounting Remote Diaphragm Seal Transmitter

Step	Action
1	Mount transmitter at a remote distance determined by length of capillary tubing.
2	H mark side of transmitter to upper flange mounting on tank wall. ATTENTION On insulated tanks, remove enough insulation to accommodate the flange extension.
3	Tighten bolts to torque of Carbon steel (SNB7): $20 \pm 1\ N \bullet m$, 304SST: $10 \pm 1\ N \bullet m$.

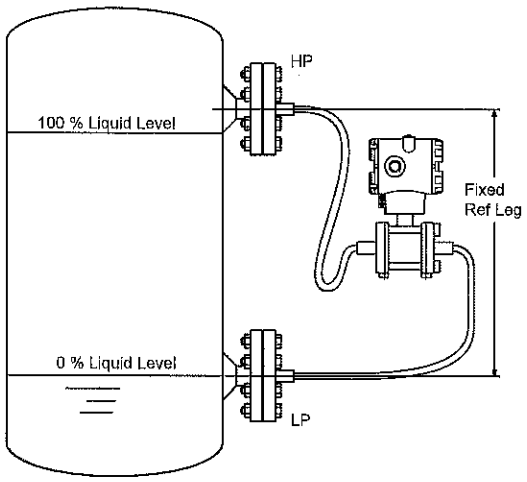

Figure 2-6 Typical Remote Diaphragm Seal Transmitter Installation

ATTENTION

Calculation of Allowable Transmitter Installation Location in Remote Seal Type Differential Pressure Transmitter.

When installing a remote seal type differential pressure transmitter on an enclosed tank, we recommend the installation of the main unit below the lower flange. However, it is sometimes necessary to install the transmitter main unit between the upper and lower flanges due to piping restrictions.

The condition that must be satisfied to ensure normal transmitter operations is specified here.

If a transmitter is installed in the position shown in Figure 2-7, the inner pressure of the tank (P_0) and the head pressure of the liquid sealed in the capillary can be applied to its main unit (low limit flange side).

The transmitter functions normally as long as the pressure applied to its diaphragm surface is equal to or higher than the low limit P (kPa abs.) of the allowable pressure of its main unit.

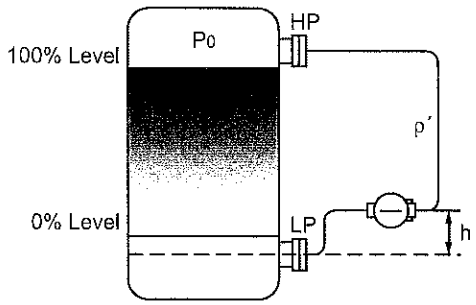

Figure 2-7

This condition can be expressed with the following formula;

$$P_0 + ((\rho' h)/102) \geq P(1\,kPa = 102\,mmH_2O)$$

Therefore, $h \leq (P_0 - P) \times 102/(\rho')$

Table 2-2

	Specific gravity of sealed liquid ρ'	Low limit of allowable pressure P (kPa abs.)	Liquid contacting temperature range (°C)
General application (*1)	0.935	2	-40 to 40
High temperature application (-*2)	1.07	2	-5 to 90
High temperature & vacuum application (*3)	1.07	0.1333	-5 to 50
High temperature & high vacuum application (*4)	1.09	0.1333	-10 to 250
Oxygen application, chlorine application (*5)	1.87	53	-10 to 40

Remarks

1. An application where the pressure in the tank P_0 becomes a vacuum requires special caution.
2. If the above condition is not met, the pulling force applied to the diaphragm surface will exceed the specified range.

   Foaming occurs because the pressure of sealed liquid exceeds the saturated vapor pressure and can cause zero point shifting. Negative pressure applied to the diaphragm can cause buckling and destroy the diaphragm.
3. When the liquid contacting temperature exceeds the levels shown in the table, the low limit of the allowable pressure also changes. Check the specifications.
4. *1. GTX□□R-□A

   *2. GTX□□R-□B

   *3. GTX□□R-□C

   *4. GTX□□R-□D

   *5. GTX□□R-□H&J

Direct Mounting

The direct mount GTX can be installed directly on the pipe (direct mounting), on a 2-inch pipe using the optional mounting brackets, or on a wall, also using the brackets.

⚠ CAUTION

Do not use the direct mount GTX transmitter as a foothold, or for any other improper purpose. Doing so may result in damage to equipment and/or physical damage.
For taper threaded connection, use sealing tape to prevent leakage.

For straight threaded connection be sure to use the gasket included with the transmitter.

When screwing the transmitter to the connecting pipe, do not tighten it holding the housing of the transmitter.

Always use wrenches and hold the hex-head part of the transmitter. (See Figure 2-8)

Avoid installing the transmitter upside down. Doing so may cause debris to fill inside the transmitter and be the cause of inaccurate measurements.

Make sure the process pressure does not exceed the maximum allowed temperature. If necessary, use siphons or other measures to lower the temperature at the wetted parts of the transmitter.

When measuring liquids, take measures to keep the process fluid from freezing.

Install the transmitter in a location where there is no excessive impact, vibration, or pressure.

Screwing on the transmitter to a connecting pipe filled with liquid may damage the transmitter. (See Figure 2-8)

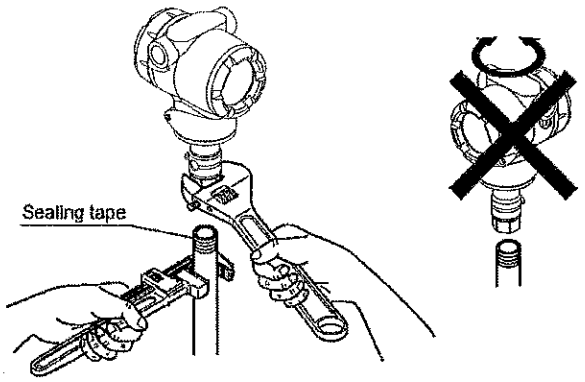

Figure 2-8 Installation precaution 1

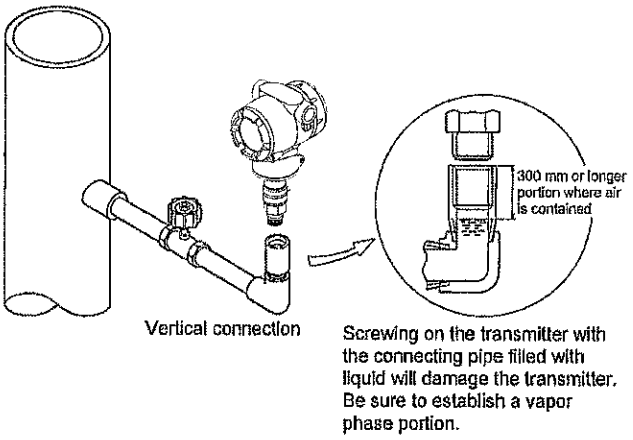

Figure 2-9 Installation precaution 2

<Example of calculation>

Let's take up an example in which a remote seal type transmitter of the of the general specifications is used for a vacuum application (3kPa abs.)

- Liquid contacting pressure :Normal pressure (24°C)
- Low limit of allowable pressure (ρ) :2 kPa abs. (15mmHg abs.)
- Specific gravity of sealed liquid (ρ') :0.935
- Inner pressure of tank (ρ_0) :3kPa abs.

The condition that must be met to satisfy the transmitter specifications is as follows:

$$h \leq (P_0 - P) \times 102/(\rho')$$

$$h \leq (3-2) \times 102/0.935 = 109mm$$

Therefore, the high limit of the transmitter position is 109mm.

⚠ CAUTION

If the above conditions are not met, the diaphragm surface will be pulled by negative pressure that exceeds its operating limit. When the pressure reaches the saturated vapor pressure, the sealed liquid will form bubbles. If the negative pressure continues to increase, the diaphragm may buckle and be damaged.
Azbil Corporation recommends installing the transmitter at least 10 cm below the lower flange

2.3 : Piping AT9000 Advanced Transmitter

Summary

The actual piping arrangement will vary depending upon the process measurement requirements and the transmitter model. Except for flanged and remote diaphragm seal connections, process connections are made to 1/4 inch or 1/2 inch NPT female connections in the process head of the transmitter's meter body. For example, a differential pressure transmitter comes with double ended process heads with 1/4 inch NPT connections but they can be modified to accept 1/2 inch NPT through optional flange adapters.

The most common type of pipe used is 1/2 inch schedule 80 steel pipe.

Many piping arrangements use a three-valve manifold to connect the process piping to the transmitter. A manifold makes it easy to install and remove a transmitter without interrupting the process. It also accommodates the installation of blow-down valves to clear debris from pressure lines to the transmitter.

Figure 2-10 shows a diagram of a typical piping arrangement using a three-valve manifold and blow-down lines for a differential pressure transmitter being used to measure flow.

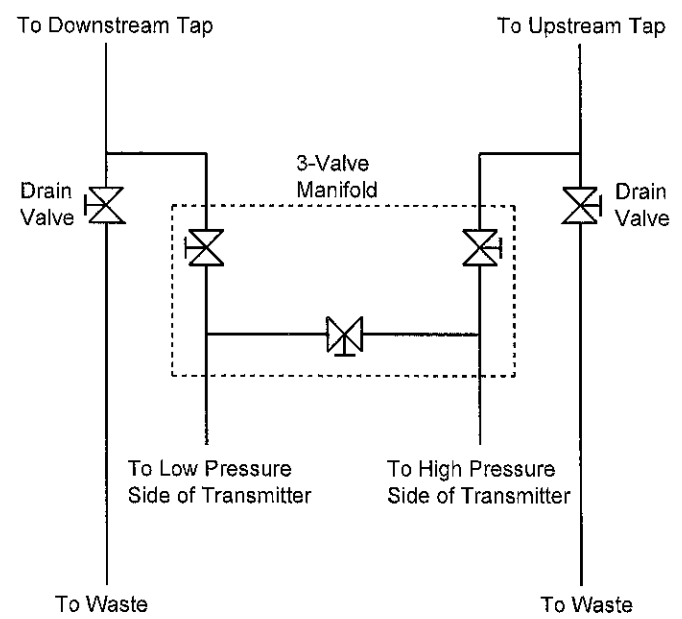

Figure 2-10 Typical 3-Valve Manifold and Blow-Down Piping Arrangement.

Process connections

Table 2-3 describes typical process connections for a given type of transmitter.

Table 2-3 Process Connections

Transmitter type	Process Connection
Differential Pressure	Process heads with 1/4 inch NPT internal thread connection. Flange adapters and manifolds with 1/2 inch internal thread connections are optional.
Gauge Pressure	Process head with 1/2 inch NPT internal thread connection. Process heads with 1/4 inch NPT internal thread connection. (GTX□□G) Flange adapters and manifolds with 1/2 inch internal thread connections are optional (GTX□□G)
Absolute Pressure	Process heads with 1/2 inch NPT internal thread connection (GTX□□A)
Flange Mounted Liquid Level	1.5. 2 or 3 inches flange with flush or 2, 3 or 4 inches extended diaphragm on high pressure side. Reference side has standard differential pressure process head.
Remote Diaphragm Seals	See Model Selection Guide for description of available Flanged, Button-diaphragm (G1·1/2), and Wafer type process connections.
Gauge Pressure (Direct Mount)	1/2 inch NPT internal thread 1/2 inch NPT external thread Rc1/2 internal thread R1/2 external thread M20 × 1.5 external thread G1/2 external thread

Installing flange Adapter

Table 2-4 gives the steps for installing an optional flange adapter on the process head.

Slightly deforming the gasket supplied with the adapter before you insert it into the adapter may aid in retaining the gasket in the groove while you align the adapter to the process head. To deform the gasket, submerse it in hot water for a few minutes then firmly press it into its recessed mounting groove in the adapter.

Table 2-4 Installing Adapter Flange

<table>
<tr><th>Step</th><th>Action</th></tr>
<tr><td>1</td><td>Carefully seat PTFE (white) gasket into adapter groove.</td></tr>
<tr><td>2</td><td>Thread adapter onto 1/2 inch process pipe and align mounting holes in adapter with holes in end of process head as required.</td></tr>
<tr><td>3</td><td>Secure adapter to process head by hand tightening 7/16-20 UNF hexhead bolts.
Example-Installing adapter on process head

ATTENTION
Apply an anti-seize compound on the stainless steel bolts prior to threading them into the process head.
 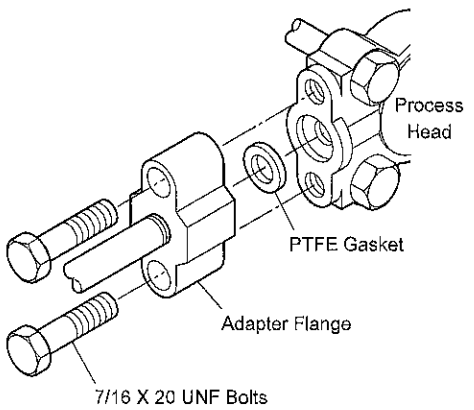
</td></tr>
<tr><td>4</td><td>Evenly tighten adapter bolts to the following torque;
<table>
<tr><td>Adapter material</td><td>CS/SS</td><td>CS/SS</td><td>PVC</td></tr>
<tr><td>Bolt material</td><td>Carbon steel (SNB7)/ SS630</td><td>304SST</td><td>Carbon steel (SNB7)/ 304SST</td></tr>
<tr><td>Torque N•m</td><td>20 ±1</td><td>10 ±0.5</td><td>7 ±0.5</td></tr>
</table></td></tr>
</table>

2.3.1 :Piping for Liquid, Gas or Steam Flow Rate Measurement

Recommended Piping - Example 1

The illustration shows a typical example for liquid Flow Rate Measurement. This Differential pressure transmitter is located below the differential pressure output port of the process pipe.This minimizes the static head effect of the condensate.

The following apply:

Grade the pipe at the differential pressure output part.

Inclination symbol ◿ in illustration: Low level ◿ High level

After piping work, ensure that the connecting pipe, the 3-way manifold valve, and the transmitter have no pressure leak.

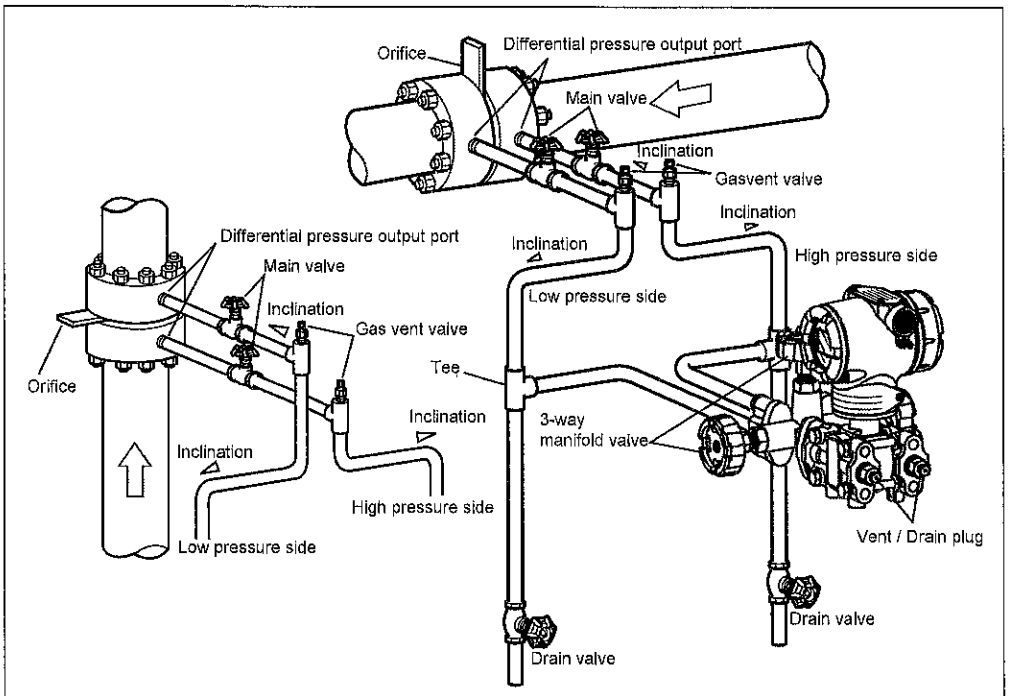

Figure 2-11 Piping for Liquid Flow Rate Measurement - Example

This transmitter is located underneath the differential pressure output port of the process pipe.

Recommended Piping - Example 2

The illustration shows a typical example for Gas Flow Rate Measurement. This Differential pressure transmitter is located above the differential pressure output port of the process pipe.The condensate drains away from the transmitter.

The following apply:

Grade the pipe at the differential pressure output part.

Inclination symbol in illustration: Low level High level

After piping work, ensure that the connecting pipe, check for pressure leaks around the 3-way manifold valve, and the transmitter.

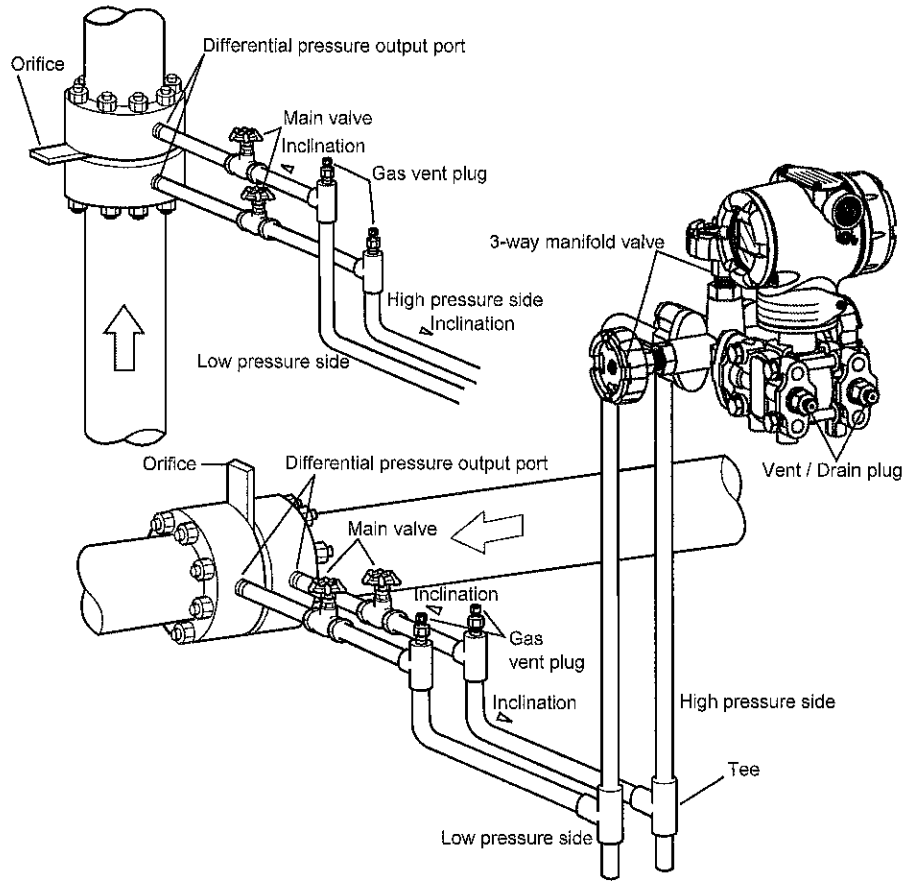

Figure 2-12 Piping for Gas Flow Rate Measurement - Example

This transmitter is located above the differential pressure output port of the process pipe.

Recommended Piping - Example 3

The illustration shows a typical example for Steam Flow Rate Measurement. Recommended for a Differential pressure transmitter located below the differential pressure output port of the process pipe.

The following apply:

Grade the pipe at the differential pressure output part.

Inclination symbol ⊿ in illustration: Low level ⊿ High level

After piping work, ensure that the connecting pipe, the 3-way manifold valve, and the transmitter have no pressure leaks.

If the process pipe is vertically mounted, mount seal pots at different levels to prevent zero drift. But in this case, you cannot apply the previously-used zero adjustment procedure (using a 3-way manifold valve). For zero shift occurring at different levels, use an HART® communicator.

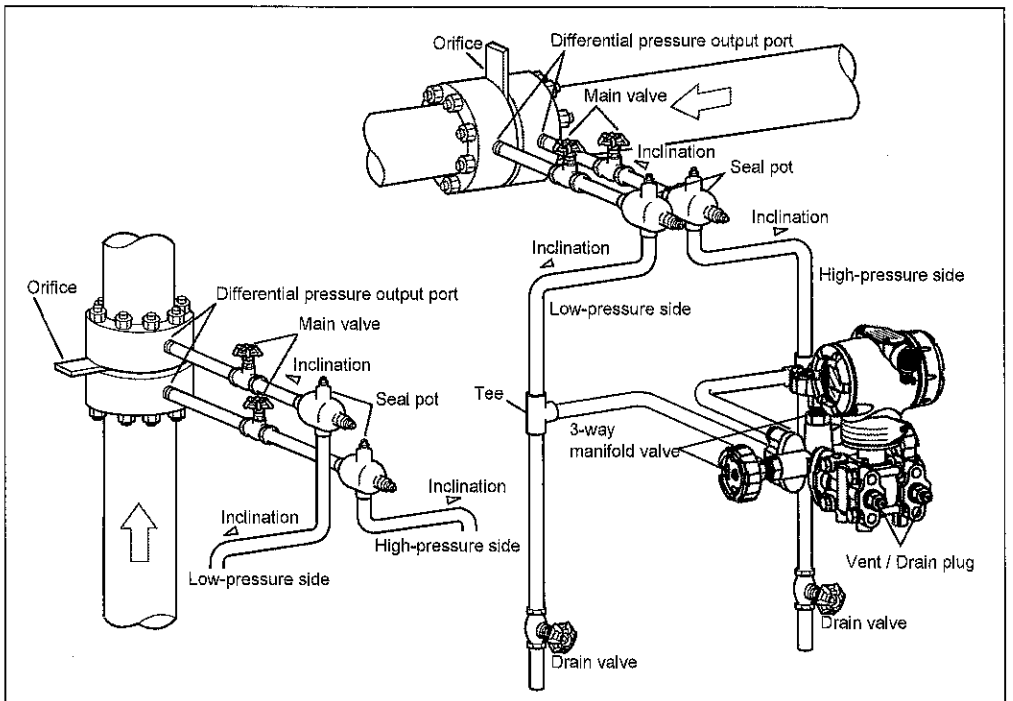

Figure 2-13 Piping for Steam Flow Rate Measurement - Example

This transmitter is located under the differential pressure output port of the process pipe.

2.3.2 :Pressure Measurement - Piping

Recommended piping - Example

For gas-pressure measurement, piping should be performed following the typical example shown here. Always observe these points:

After completing piping work, check for pressure leaks around connecting pipe and transmitter.

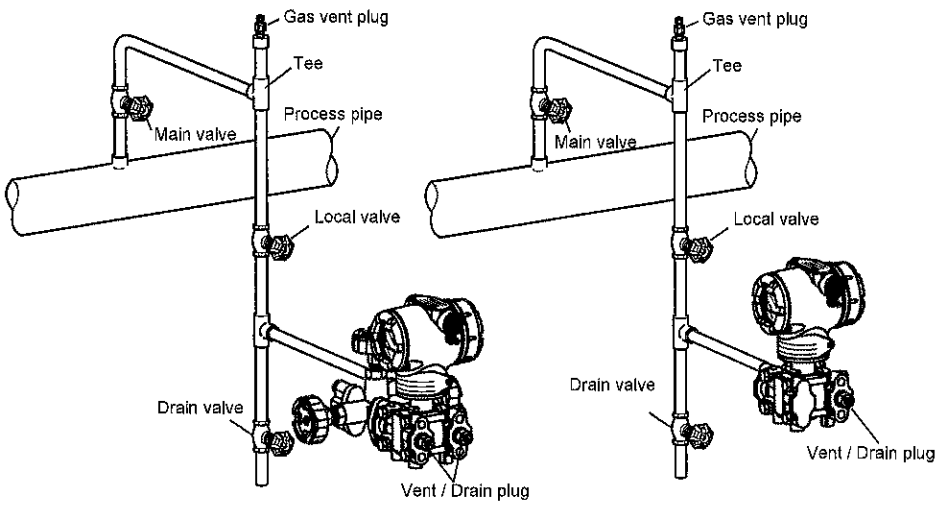

Figure 2-14 Gas Pressure Measurement - Piping

Piping method

The piping method for the fluid to be measured depends on the meter installation position and the pipe line state. Typical examples of piping are shown in Figure 2-15.

Connect pipes by the following procedure:

(1) Use a T-shaped joint for the connecting pipeline.

(2) Install a main valve between the entrance of the connecting pipe and the T-shaped joint.

(3) If the process is a horizontal line, tilt the pipe to allow draining from the pressure line.

~Note *In case of a high pressure process, select a joint of appropriate specifications and shape and a pipe of appropriate shape and material with care.*

(4) Determine the connecting pipe schedule number and the nominal thickness of the connecting pipe from the process based on conditions such as the process pressure.

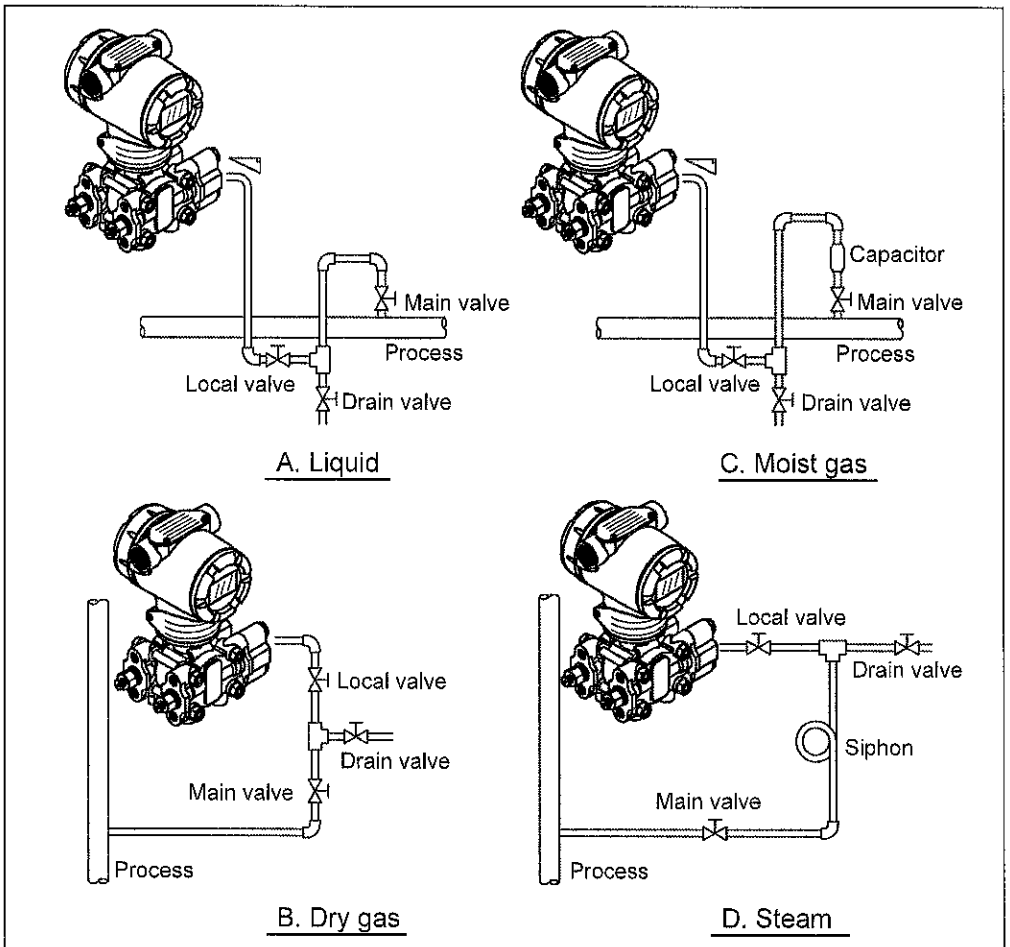

Figure 2-15 Example of Piping

Auxiliary equipment

(1) Oil sealing and air purging

If the pressure medium (such as suspension, high viscosity, and corrosive fluid) should not be led directly to the element, avoid it by means of sealing or purging. Various sealing and purging methods are available. Consult us for each case.

(2) Preventing pulsations

If the process has serious pulsations or great pressure fluctuations, provide a throttle valve in the middle of the connecting pipe to prevent pulsations.

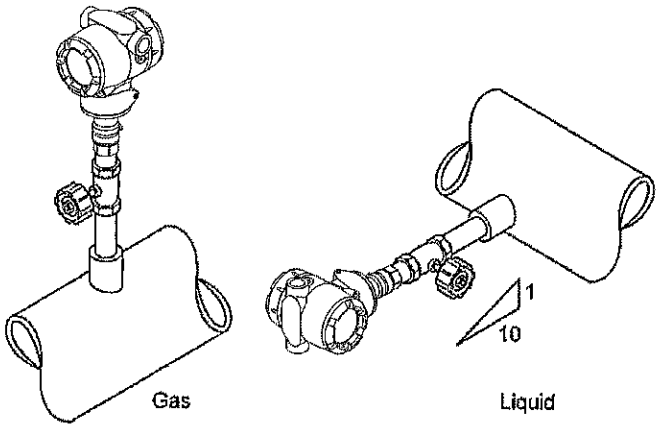

Figure 2-16 Example of direct mounting

When mounting the transmitter directly onto the process line, takeinto consideration the weight, temperature at wetted part, and vibration. If necessary, use the optional bracket for reinforcement.

2.3.3 :Liquid Level Measurement - Piping (GTX_ _D/GTX_ _G)

Piping

Introduction

For measurement by GTX_ _D type of liquid level in a tank, the piping method depends on whether the tank is open or closed. For closed tanks, piping is modified according to whether you use the gas sealing method (dry leg) or the liquid sealing method (wet leg).

H mark

H indicating high pressure is marked on the center body of this transmitter. Check the mark during piping work. The low-pressure side has no mark.

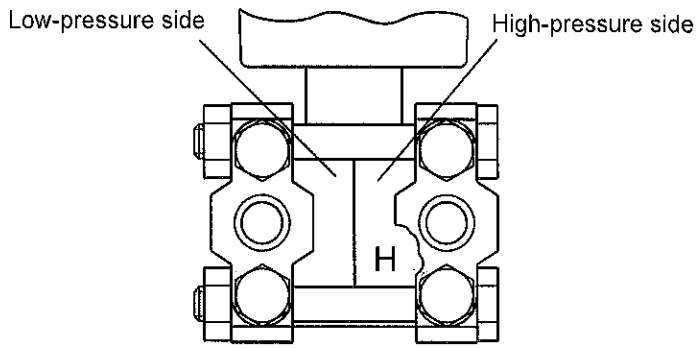

Figure 2-17 H mark on center body

⚠ CAUTION

If the nameplate indicates that the suppression is larger then 1/2 of the span, "H" is etched on the bottom left of the transmitter as viewed from the front. In this case, connect the high-pressure side of the process piping to the port on the right of the transmitter (without "H") as viewed from the front.

Example:
Range: -50 to 20 kPa
Suppression = 50 kPa, Span = 70 kPa

Since the suppression is larger than 1/2 of the span (50 > 70/2 = 35), "H" is etched on the bottom left of the transmitter as viewed from the front. The connection port for the high-pressure side of the process piping is on the right side.

Before your start

The following parts are requirements for piping work. Refer to illustration.

- 3-way manifold valve
- Pipe
- Main valve
- Union or flange
- Tee
- Drain valve
- Drain plug
- Seal pot (for closed tank and wet-leg only)

Open Tank - Piping

Recommended piping - Example

For open tanks, connect the high-pressure side of this transmitter to the lower part of the tank. Open the low-pressure side to the air.

After completing piping work, check for pressure leaks around the connecting pipe, the transmitter, and the 3-way manifold valve. The illustration shows a typical installation.

Connect the high-pressure side of this transmitter to the lower part of the tank.

Install this transmitter below the lowest liquid level to be measured.

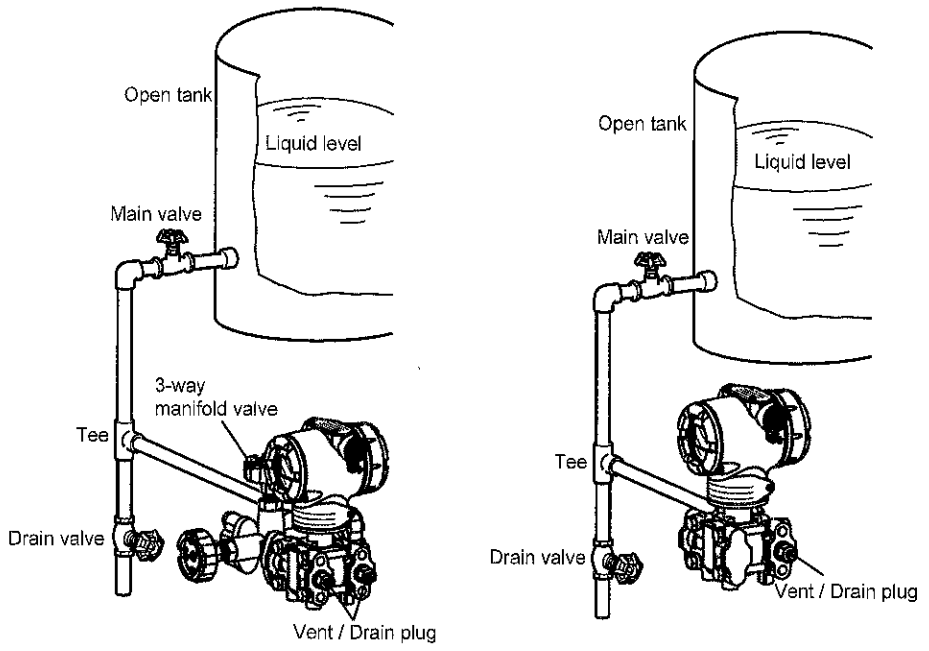

Figure 2-18 Open Tank - Piping Example

3.3.4 :Liquid Level Measurement of Closed Tank (Wet Leg)

Preparation for Measurement

⚠ WARNING

- Place the process in manual control mode.

  If the process is in automatic control mode, change it to the manual control mode before performing this work.
- Before discharging a process fluid that contains toxic substances, check the direction of discharge and take safety measures such as wearing goggles and a mask to prevent contact with the skin and eyes and to prevent inhalation. Failure to do so is dangerous and may result in physical harm.
- Make sure that the differential pressure output valve (main valve), the drain valve, the gas vent plug (refer to "Figure 2-20 Closed Tank - Piping (Wet-leg Sealing Example)".) and the high pressure side and low pressure side stop valves of the 3-way manifold valve are closed. Also, make sure that the equalizer valve of the 3-way manifold valve is open.

Calculating setting range

For the procedure for obtaining the setting range by calculation, refer to "3.8 : Set Range Calculation for Liquid Level Measurement".

Procedure

Perform zero-point adjustment and introduce process pressure into the transmitter using this procedure:

Zero-point calibration

Step	Description
1	Feed sealing liquid from the seal pot to fill the connecting pipe with sealing liquid.
2	Gradually open the stop valves of both the high-pressure side and the low-pressure side, and the drain plugs, to fill the pressure receiving part of the transmitter with sealing liquid.
3	When sealing liquid flows out from the drain plugs, close the stop valves of both the high pressure side and the low pressure side and the drain plugs. In this state, the same pressure is applied to the high pressure side and the low pressure side of the transmitter (equal pressure state).
4	Referring to procedure 2 in page 3-8, perform zero point calibration.

Step	Description
5	After completing zero-point calibration, close the equalizer valve. Open the stop valve and the drain plug of the low-pressure side to drain sealing liquid. Close the stop valve and the drain plug of the low-pressure side.

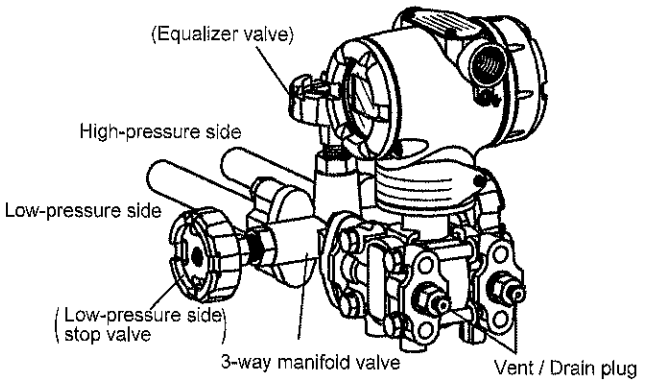

Introducing process pressure

Step	Description
1	Open the main valve (Refer to "Figure 2-20 Closed Tank - Piping (Wet-leg Sealing Example)".) to introduce process fluid into the connecting pipe.
2	Gradually open the low pressure side stop valve to introduce process fluid. After introducing process fluid into the pressure receiving part of the transmitter, close the low pressure side stop valve.
3	Make sure that the connecting pipe, the 3-way manifold valve, and the transmitter have no pressure leaks.

Starting Measurement

Procedure

Operate the valves by the following procedure to apply the differential pressure of the process to the transmitter and display the measured value by operating the HART® communicator.

How to apply process pressure

Step	Description
1	Make sure that the 3-way manifold valve is in this state: 1. High-pressure side stop valve: Fully closed 2. Low-pressure side stop valve: Fully closed 3. Equalizer valve: Fully closed
2	Fill the liquid sealing pipe with sealing liquid.
3	1. Gradually open the high-pressure side stop valve. 2. Gradually open the low-pressure side stop valve. 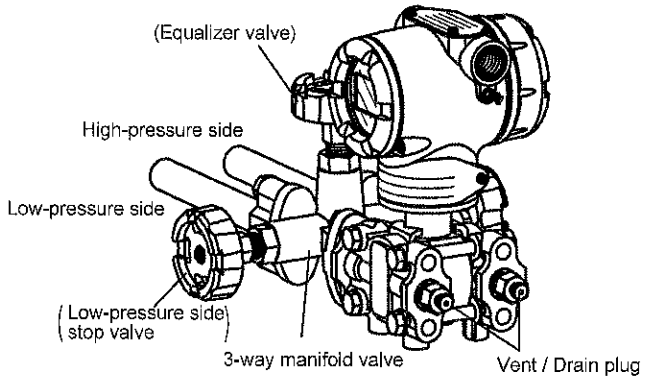

⚠ CAUTION

Close the cover of the transmitter case securely. Imperfect closure allows entry of water, damaging internal terminals and the electronics module.

- If the input and output values are inconsistent, check the range and perform calibration again.
- If the displayed data value is unstable, adjust the damping time constant.

Stopping Measurement

Procedure

How to stop the transmitter

Step	Description
1	Turn off the transmitter.
2	Operate the 3-way manifold valve by the following procedure: 1. Close the low pressure side stop valve. 2. Open the equalizer valve. 3. Close the high pressure side stop valve. 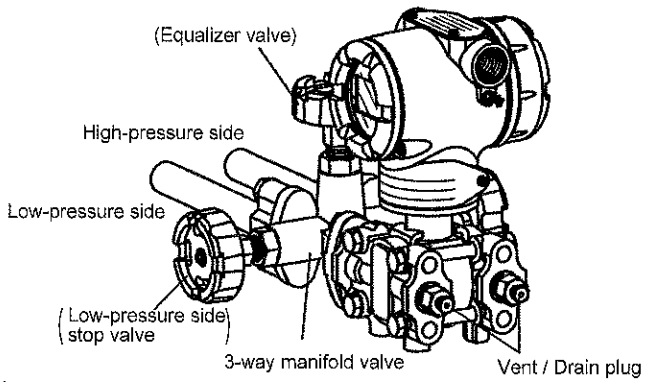
3	Close the main valve. (Refer to Figure 2-20.)

⚠ CAUTION

- If the transmitter is to be left off for a long period of time, drain process fluid from the connecting pipe and the pressure receiving part.
- Leave the equalizer valve open.