THERMAFLO ENGINEERING COMPANY Since 1986
Manufacturers Of Steam Fired Specialty Equipment

Operation, Maintenance and Installation Manual

Condensate and Boiler Feed Units

Thermaflo Engineering
PO Box 473639
Charlotte, NC 28247
Phone: (704) 940-1228
Fax: (704) 940-1227
www.thermafloengineering.com

Tel (704) 940-1228 • Fax (704) 940-1227 • www.thermafloengineering.com • *PO Box 473639, Charlotte, NC 28247*

Selection of Discharge Piping

In selecting condensate pumps and making proper piping connections, the friction in the discharge line from the pump to the boiler is very important. The pressure drop due to friction is sometimes much greater than the boiler pressure. In some cases, using larger discharge piping will make it possible to use a less expensive pump with a lower pressure rating. In all cases, adequate discharge piping will mean longer life and better service from your pump.

The pressure drop due to friction should always be estimated carefully, using the gallons-per-minute rating of the pump as a basis and referring to any standard pipe-friction tables or charts (be sure to make extra allowance for elbows, valves, etc.). The discharge pipe size and pump pressure rating should be selected so that the pump pressure rating will provide a generous margin of safety over and above the friction pressure drop plus the lift from pump to boiler water level (not to water inlet to boiler) plus the maximum pressure at which the boiler will operate.

Usually, the best discharge pipe size will be at least one size – sometimes two sizes – larger than the pump outlet tapping.

If possible, piping from the condensate pump outlet to the boiler inlet should be graded upward for the entire distance. In a downward run, or an 'up-and-down' run, air may be entrapped, restricting the flow of condensate. If an 'up-and-down' run cannot be avoided, it should be vented at the highest point.

Float Switch Settings

When condensate pumps are tested in our factory, float switches are set according to the capacity rating. At the time of installation, the float switch should be checked to see that settings have not been disturbed during shipment and that they are correct for the particular job.

The travel of the float switch between the upper (ON) position and the lower (OFF) position determines the amount of condensate delivered to the boiler each time the pump operates. At our test, the float switch is set so that the amount is equal to or a little less than the GPM rating of the pump. For example, if the pump is rated 4000 sq. ft. EDR, 6 GPM, the switch is set to deliver about 4-6 gallons at each cycle. Depending upon the water capacity of the boiler and the other characteristics of the heating system, this float switch setting may require modification for best results.

If the float switch travel is too short for the job, only a small amount of condensate will be discharged each time the pump operates and consequently the motor will have to start and stop too frequently. In normal operation, it is usually undesirable for a condensate pump to start and stop more than once every three minutes.

If the float switch travel is too long for the job, too much water will be discharged at each cycle. In this case, the boiler water level may fall too low before the pump starts. Then the boiler low-water cutoff will operate unnecessarily, or if there is a boiler-feed device it will supply make-up water unnecessarily and the heating system will become water-logged.

If the lower (OFF) position of the float switch is too low, the pump may continue running until it loses its prime and the rotary seal may be damaged by running dry. When starting up a new pump, always check the lower float switch position to be sure that the inlet from the tank to the pump is covered with water at all times.

Any condensate pump can be used for a smaller capacity than its nameplate rating by decreasing the travel of the float switch.

In addition, in the case of Thermaflo 4100, 4200, and 4300 series pumps, all units of the same horsepower are identical except for float switch settings. Therefore, many of these units can be used for larger capacities than the nameplate ratings by increasing the float switch travel. The table below shows standard float switch settings for 4100, 4200, and 4300 series Thermaflo pumps.

	Capacity Sq. Ft. E.D.R.	G.P.M. Rating	Pump Number	Approx. Inches Travel
1/3 H.P. Pump 8 Gal. steel tank or 6 Gal CI tank or 8 Gal stainless steel tank	8,000	12	4028 4222 4028-GS	3"
1/3 H.P. Pump 15 Gal. steel tank or 13.5 Gal. C.I. tank or 15 Gal. stainless steel tank	2,000	3	4132 4232 4332	3"
	4,000	6	4124 4224 4324	5"
	6,000	9	4126 4226 4326	7"
	8,000	12	4128 4228 4328	8"
1/2 H.P. pump 30 Gal. steel tank or 24 Gal. C.I. tank or 30 Gal. stainless steel tank	10,000	15	41210 42210 43210	7"
	15,000	22.5	41215 42215 43215	10"

The "travel" as listed is the vertical displacement between the water levels at the "On" and "Off" positions of the switch. The method of adjustment is indicated in the float switch instruction sheet or card that accompanies the pump. The "travel" distance can be checked by inserting a yardstick into the vent opening at the top of the tank.

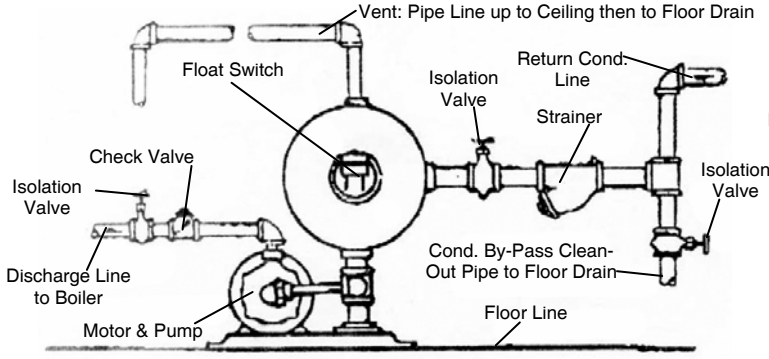

3500 Series

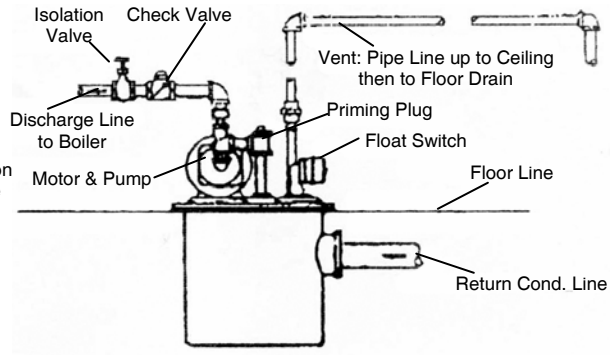

3700 Series

- **Selection**

  Be sure to select a pump that is big enough for the job. Select a capacity rating adequate for the maximum amount of condensate expected under the most severe conditions. Remember that pressure rating must be sufficient to operate against maximum boiler pressure, plus lift and friction in piping between the pump and the boiler.

  Thermaflo pumps have rated capacities of three times the maximum flow of condensate for the specified amount of radiation; in other words, when the heating system is running at maximum capacity, the pump should not be operating more than one-third of the time. This is a minimum factor of safety. If heavy overloads are possible, an oversized condensate pump should be selected.

  For most applications, where the pump is above floor level and in a reasonably dry location, Thermaflo 4100, 4200 and 4300 series pumps (for smaller jobs) and 3500 series pumps (for larger capacities and higher pressures) provide a wide range of selection. When the return is below floor level, 3700 series pumps with epoxy-coated steel tanks are recommended.

- **Heating Plant**

  Before a condensate pump can operate satisfactorily, the heating plant itself must be in good order.

  The most important point to remember is that all heating units and return lines must be equipped with properly selected Thermaflo traps in good working order. With improper or malfunctioning steam traps, steam or water above 190°F may return to the condensate pump. For best operation, condensate should be 160°F or less. Although Thermaflo pumps can operate at higher temperatures, we cannot guarantee full capacity or satisfactory operation if condensate is allowed to go above 190°F.

  For unusually hot condensate, a specially designed unit may be required.

  It is equally important to provide Thermaflo strainers on all lines, to keep scale and dirt out of the tank and pumps.

- **Location**

  Locate the pump as **close to the boiler** as practical. A more powerful pump will be needed if it must be far away from the boiler or below the boiler.

  Locate the pump above floor if possible, in a position where it will be clean, dry, and **easily accessible.**

  Locate the tank inlet below the lowest point of return lines. If the pump must be below floor level, use a 3700 series unit with epoxy-coated steel tank and take all possible precautions to keep the motor and electrical equipment dry.

  Set the pump on a substantial, level foundation – preferably off the floor, on a raised concrete base.

- **Pipe Connections**

  Typical condensate pump hookups are shown in the diagrams. No two individual installations will be exactly alike, but certain essentials apply to all:

  The condensate inlet should be equipped with a strainer to keep scale and dirt out of the tank, unless all return lines are exceptionally well protected with strainers. In addition, there should be some means (such as the isolation valve arrangement shown in the diagrams) of disposing of condensate temporarily when the condensate pump is disconnected.

  At the pump outlet, there should be a check valve (reasonably close to the pump) to prevent water from flowing back out of the boiler. In addition, an isolation valve should be provided for use when the pump is disconnected.

  The vent opening at the top of the tank must be left open to the atmosphere. Good practice is to run a pipe from the vent up to the ceiling, then down to a point near the floor drain. This keeps dirt out of the tank and helps keep the motor dry. For priming the pump when starting up or testing, a union or a plugged tee at the vent opening is desirable.

  Many variations in piping arrangements are possible; and local codes vary widely. For example, in some cities there must be a bypass around the condensate pump with gate valves, so that the return line can be connected directly to the boiler when the pump is disconnected.

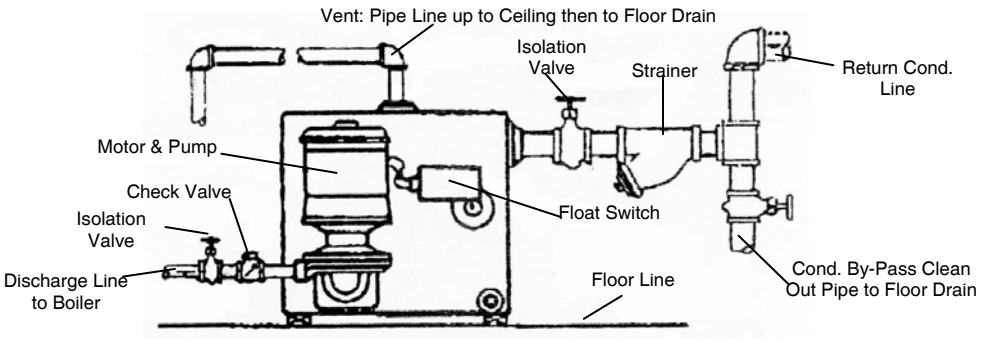

4100, 4200 and 4300 Series

- **Electrical Connections**

Check the motor characteristics (phase, cycles, voltage) to be certain that they are correct for your power supply; otherwise, you may burn out the motor by running it on too high a voltage.

Be sure that only a qualified electrician makes the electrical connections to the pump. With small, single-phase units, the pump motor is commonly controlled directly by the float switch. On three-phase units, the float switch operates a motor starter, which starts and stops the pump motor.

When a pump with a make-up water valve is used, the pump motor is controlled by a boiler water level control.

Make-up Water Valve: Mechanical, plug mounted valve with stainless steel float. Rated up to 45 PSI inlet water pressure. At pressures exceeding 45 PSI, a PRV is required on the inlet cold water line.

Be sure that all wiring is well protected from moisture.

Be sure that the motor is connected so that the pump rotates in the correct direction.

- **Starting and Operation**

Do not operate the pumps without priming. If the pumps are run dry, even for a very short time, they may be severely damaged.

Be sure to keep the motor dry.

WHEN STARTING UP A PUMP, ALWAYS ROTATE IT BY HAND TO BE SURE IT TURNS FREELY, BEFORE TURNING ON POWER.

- **Ordering Replacement Parts**

When ordering replacement parts for Thermaflo condensate pumps, only the following information is needed:

The name of the part assembly.
The pump model number and serial number, from the brass nameplate on the tank.

Note: If you believe that your trouble is caused by defective equipment, please return the complete pump and motor unit, or other assembly, to us AS-IS. An attempt to adjust or repair such equipment on the job may destroy evidence of defective workmanship or material, thus making it difficult or impossible for us to handle your claim properly.

- **Troubleshooting**

Motor overheats or burns out, or pump does not deliver enough condensate to boiler, or pump runs continuously or almost continuously:

Check the capacity and pressure rating of the pump; it may be too small for the job.

Check the temperature of condensate; the pump may not handle it if it is too hot.

Check the float switch; it may be damaged and jammed in the "on" position.

Check the lines and valves between the pump and boiler for clogging; check the pump for clogging.

Pump starts and stops too frequently:

Check the float switch adjustment; too little travel between "on" and "off" positions.

Pump does not start until after boiler water falls below safe level:

Check the float switch adjustment; too little travel between "on" and "off" positions.

Pump makes excessive noise:

Has the pump been damaged by operating without prime or with hot condensate (Above 190°F)?

Is the pump on a substantial foundation? Is a sound-deadening base required?

Is the noise being transmitted through piping? If so, short lengths of hose connected in delivery and return lines will usually improve conditions greatly.

Pump leaks:

Unit may have been disassembled and reassembled improperly.

The rotary seal may be worn or scored or may have been installed improperly. If worn, has this been caused by abrasive material in lines?

THERMAFLO ENGINEERING COMPANY Since 1986
Manufacturers Of Steam Fired Specialty Equipment

Operation & Installation

Replacing the Rotary Seal Assembly on G Series Thermaflo Pumps: 1/3, 1/2, and 3/4 HP

1. Motor	*4. Tube Fitting*	*7. Rotary Seal Assembly*	*10. Housing Gasket*
2. Water Slinger	*5. Motor Screws (4)*	*8. Impeller*	*11. Pump Housing*
3. Motor Bracket	*6. Pump Screws (4)*	*9. Impeller Screw*	*12. Threaded Inlet Casting*

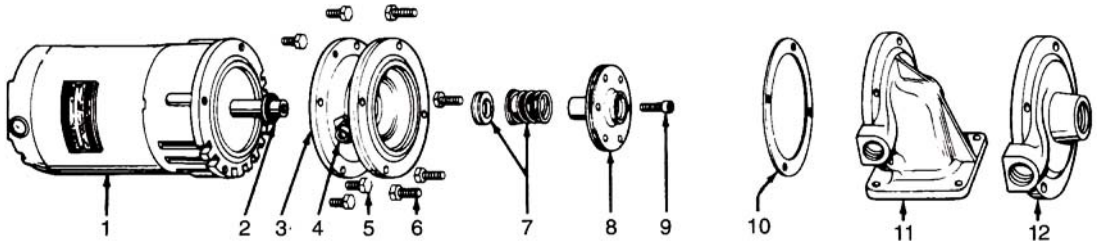

REMOVAL OF OLD SEAL ASSEMBLY

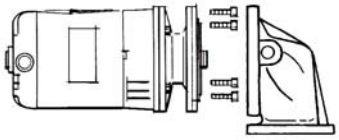

A) Remove pump housing from motor bracket and impeller assembly by removing pump screws.

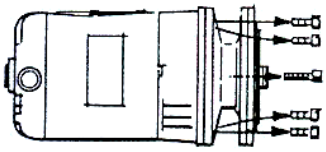

B) Remove impeller screw and motor screws. (Note: opposite end of motor shaft is fitted with screwdriver slot to hold shaft securely while impeller screw is being removed.)

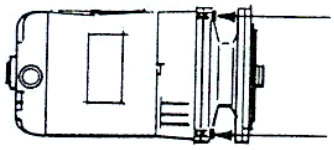

C) Insert two of the pump screws into the two threaded holes in the bracket. Tighten them slowly and evenly to force the impeller and bracket off the shaft. ***Do not pry the impeller or bracket!***

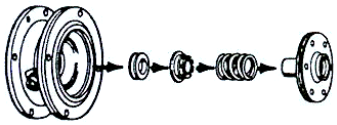

D) Remove old seal parts from impeller hub and bracket. Be sure water slinger is in place.
E) Clean impeller hub thoroughly…remove all loose particles of dirt, grease, etc. Use fine emery cloth if necessary. Also clean the recess in the bracket so the new seat will fit perfectly. Remove all particles and dirt on gasket surfaces of the two castings.

INSTALLATION OF NEW SEAL ASSEMBLY

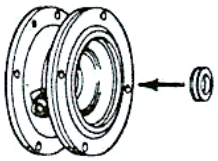

F) Coat outside edge of new seat with seal lubricant and slip it into the bracket. Press into bracket with thumbs or wooden dowel. Handle seat carefully so seating surfaces are not scratched or chipped . . . be sure it is squarely seated.

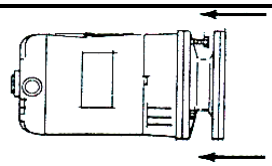

G) Remount bracket on motor.

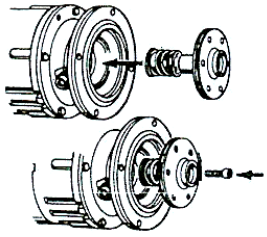

H) Lubricate impeller hub with seal lubricant. Slip new bellows and spring onto impeller hub. Be sure bellows slides freely on impeller hub.

I) Replace impeller on motor shaft and secure with impeller screw. Hold shaft with screw driver slot while tightening screw.

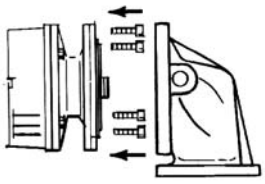

J) Replace pump housing onto bracket, using a new housing gasket. Secure with pump screws. Be certain gasket is seated properly.

Replacing the Rotary Seal Assembly On J Series Thermaflo Pumps: ½ HP – 3 HP

1. Motor	***5. Rotary Seal Assembly***	***9. Housing Gasket***
2. Water Slinger	***6. Impeller***	***10. Pump Screws (8)***
3. Bracket	***7. Lock Washer***	***11. Vertical Inlet Casting***
4. Motor Screws (4)	***8. Impeller Nut***	***12. Horizontal Inlet Casting***

Tools Needed:

Large Screwdriver
7/16" Wrench
9/16" Wrench
5/8" Socket
1" Socket

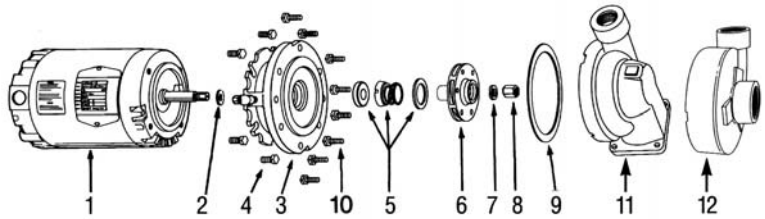

REMOVAL OF OLD SEAL ASSEMBLY

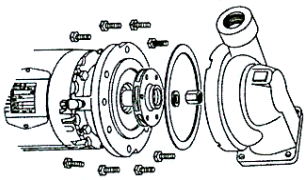

A) *Remove 8 pump screws and lift out pump and motor; remove drip cover. Insert large screwdriver into slot at end of motor shaft; hold shaft steady and remove impeller nut and washer from nose of impeller by turning counterclockwise.*

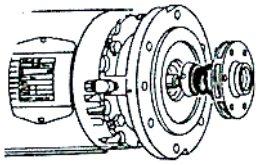

B) *While still holding motor shaft steady with screwdriver, use 1""socket to remove impeller by turning counterclockwise.*

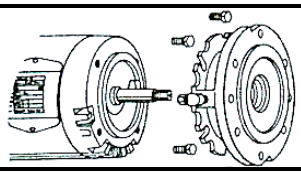

C) *Remove the 4 motor screws and separate the bracket from the motor.*

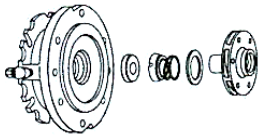

D) *Remove old seal parts from impeller hub and bracket. Be sure water slinger is in place. Clean the recess in the bracket so that the new seat will fit perfectly and make a watertight joint. If bracket is badly eroded at recess, through severe use, casting should be replaced. Clean all gasket surfaces. Clean impeller hub thoroughly; remove loose particles of dirt, etc. Check prime tube or seal flush line and clean as required.*

INSTALLATION OF NEW SEAL ASSEMBLY

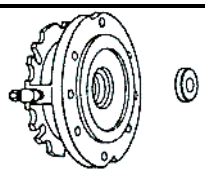

E) *Coat outside edge of new seat with seal lubricant and slip it into the bracket. Press into bracket with thumbs or wooden dowel. Handle seat carefully so sweating surfaces are not scratched or chipped…be sure it is squarely seated.*

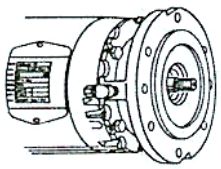

F) *Remount bracket on motor.*

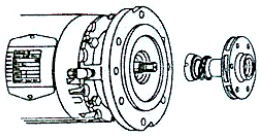

G) *Lubricate impeller hub with seal lubricant, Slip new bellows and spring onto impeller hub. Be sure bellows slide freely on impeller hub.*

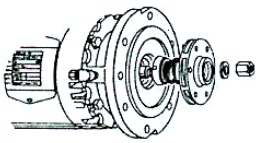

H) *Thread impeller on motor shaft extension and secure with washer and impeller nut. Hold shaft with screwdriver slot while tightening.*

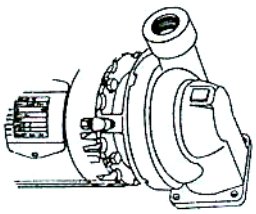

I) *Replace motor assembly onto volute; using new housing gasket. Secure with pump screws. Be certain gasket is seated properly.*

9037-891
SERVICE
BULLETIN

Class 9037 Type HG Series A
FLOAT SWITCH

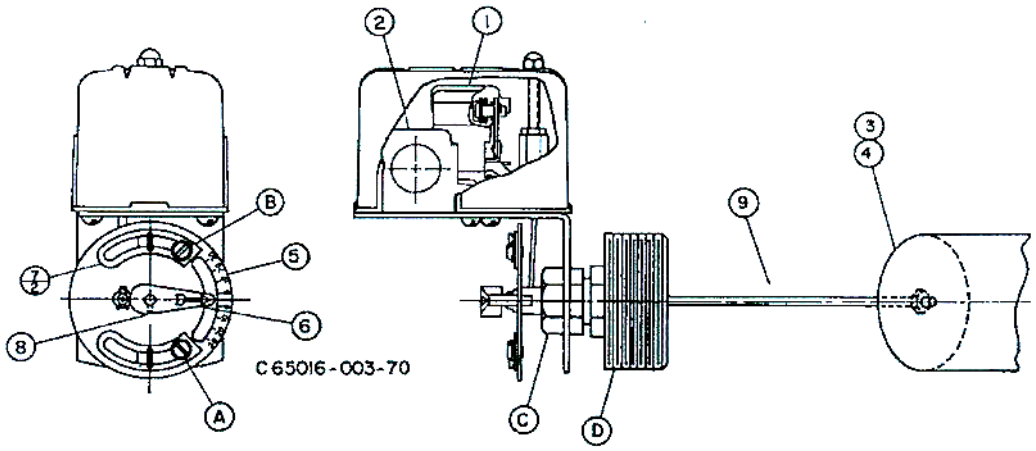

CAUTION: Switches are shipped with a bracket attached to the mounting plate. This bracket prevents the float and rod from moving in the tank during shipment. When installing the system, this clearly marked shipping bracket must be removed and discarded.

APPLICATIONS: For automatically controlling the liquid level in a closed tank by float movement.

MOUNTING: The Type HG Screw-in Tank Float Switches are mounted directly to the tank by means of the 2 ½" I.P.S. threaded fitting (D). Before screwing this fitting into the tank, loosen Nut (C) so that the fitting (D) is free to rotate in the switch bracket. Tighten the fitting (D) so that there will be no leak past the threads. Then revolve the switch case until it is horizontal and tighten Nut (C).

ENCLOSURE RATING: NEMA 1 ENCLOSURES ARE INTENDED FOR INDOOR USE PRIMARILY TO PROVIDE A DEGREE OF PROTECTION AGAINST CONTACT WITH THE ENCLOSED EQUIPMENT IN LOCATIONS WHERE UNUSUAL SERVICE CONDITIONS DO NOT EXIST.

WARNING: TO AVOID SHOCK HAZARD, DISCONNECT ALL POWER BEFORE INSTALLING OR SERVICING DEVICE.

ADJUSTMENTS: Switches are shipped from the factory set for a specified float travel. Resasonable adjustment of float travel can be made in the field by moving adjusting strips (7) which are held in place by Screws (A) and (B). Loosening Screw (B) and moving upper adjustment strip (7) will affect the upper limit of float travel only. Loosening Screw (A) and moving lower adjusting strip (7) will affect the lower limit of float travel.

REPLACEMENT PARTS LIST

Item Number	Description	Number Req'd.	Part Number
1	Set of Moveable and Stationary Contacts	2	9998 PC-242
2	Switch Mechanismℵ	1	65079-502-51
3	Float (304 SS)	1	9049 HF3
4	Float (316 SS)	1	9049 HF4
5	Adjusting Plate Assembly	1	2810-D7-G1
6	Operating Lever	1	65079-042-01
7	Adjusting Strip	2	2810-X8
8	Set Screw	1	21801-14080
9	45° - Connector and Rod Assy	1	2810-C3-G9
9	90° Offset 3" Connector and Rod Assy	1	2810-C3-G15
9	90° Offset 4-1/4" Connector and Rod Assy	1	2810-C3-G19
9	90° Offset 5" Connector and Rod Assy	1	2810-C3-G18
9	90° Offset 7" Connector and Rod Assy	1	2810-C3-G6
-	Seal and Installation Kit (BUNA-N)	1	9998 PC-337
-	Seal and Installation Kit (VITON)	1	9998 PC-338

ℵ Orders for mechanisms must show Class and Type so nameplate on replacement can be correctly stamped.

9037-891
SERVICE
BULLETIN

FLOAT & LINK POSITIONS

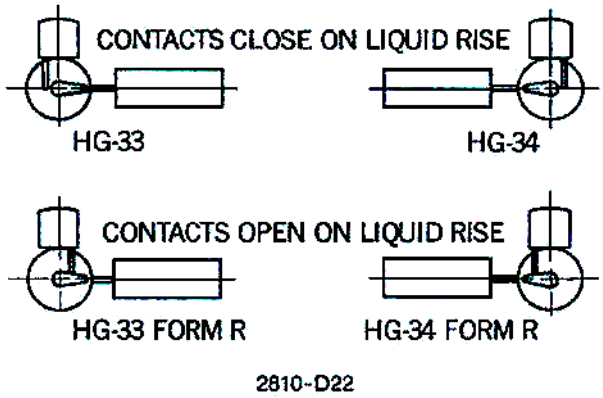

2810-D22

PRESSURE: In the use of any of these Float Switches, the pressure limit within the closed tank must not exceed 100 lbs.

MOTOR PROTECTION: A float switch of this type does not afford motor protection, however it is quite frequently used as a pilot to operate a starter providing these desirable features. The Square D Co. manufactures a complete line of motor protective switches, information on which will be sent upon request.

REVERSE ACTION: To change, relocate operating link as shown in table 2810-D22 above to the opposite slot in base plate and corresponding hole in adjusting plate (Item 5).

TYPICAL WIRING DIAGRAMS

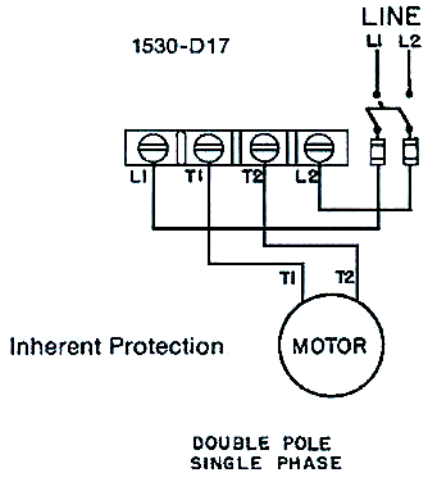

DOUBLE POLE
SINGLE PHASE

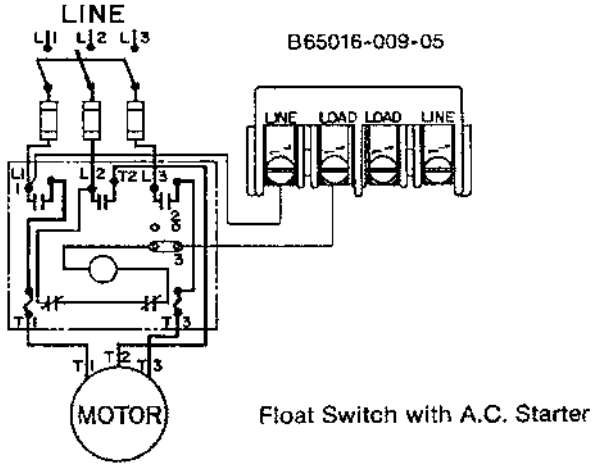

Float Switch with A.C. Starter

ELECTRICAL RATINGS (HORSEPOWER)

Voltage	Single Phase AC	Polyphase AC	DC
115	2 HP	3 HP	½ HP
230	3 HP	5 HP	½ HP
460/575		1 HP	
32			¼ HP

Control Circuit Rating: A600

9038-893
SERVICE
BULLETIN

Class 9038 Type CG Series A
MECHANICAL ALTERNATOR

CAUTION: Switches are shipped with a bracket attached to the mounting plate. This bracket prevents the float and rod from moving in the tank during shipment. When installing the system, this clearly marked shipping bracket must be removed and discarded.

APPLICATIONS: The Class 9038 Type C Mechanical Alternators serve to open and close an electric circuit by an upward and downward float movement. The forces are applied by means of a float operating between different fluid levels. The action is such that two switch units are alternated on successive cycles. If the liquid level continues to rise or fall with one pump in operation, the lever will continue to travel to a further position at which point the "second" switch will be operated, throwing the stand-by pump across the line.

MOUNTING: The Class 9038 Type C Mechanical Alternators are mounted directly to the tank by means of the 2 ½" NPT threaded fitting (D). Before screwing this fitting into the tank, loosen Nut (C) so that the fitting (D) is free to rotate in the switch bracket. Tighten the fitting (D) so that there will be no leak past the threads. Then revolve the switch case until it is horizontal and tighten Nut (C).

PRESSURE: In the use of the CG Alternators, the pressure limit within the closed tank must not exceed 100 psi.

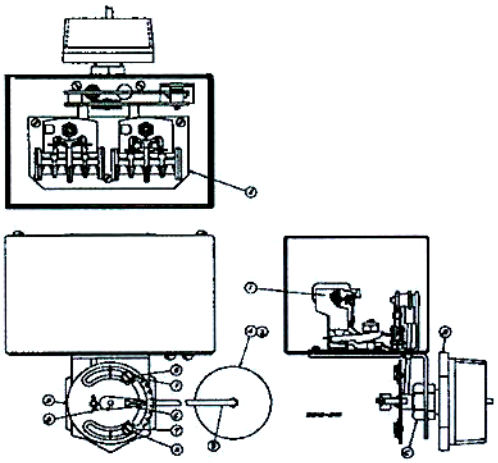

ELECTRICAL RATINGS (HORSEPOWER)

Voltage	Single Phase AC	Polyphase AC	DC
115 ……..	2 HP	……..3 HP	…… ½ HP
230 ……..	3 HP	……..5 HP	…… ½ HP
460/575 ……..		……..1 HP	……
32 …….		……..	…… ¼ HP

Control Circuit Rating: A600

REVERSE OPERATION: Form R controls are arranged for reverse action. In this form, the contacts will open on increase in liquid level. It is not recommended that a change be made in the field from standard to reverse operation or vice versa.

MANUAL TRANSFER (LEAD-LAG) SELECTOR: Form N3 switches have a manually engaged selector which voids alternation. The pump selected to lead always comes on first. With selector disengaged, the unit reverts to normal alternation.

MOTOR PROTECTION: A control of this type does not afford motor protection. However, it is quite frequently used as a pilot to operate a starter providing this desirable feature. The Square D Company manufactures a complete line of motor protective devices, information on which will be sent upon request.

ENCLOSURE RATING: NEMA 1 ENCLOSURES ARE INTENDED FOR INDOOR USE PRIMARILY TO PROVIDE A DEGREE OF PROTECTION AGAINST CONTACT WITH THE ENCLOSED EQUIPMENT IN LOCATIONS WHERE UNUSUAL SERVICE CONDITIONS DO NOT EXIST.

WARNING: TO AVOID SHOCK HAZARD, DISCONNECT ALL POWER BEFORE INSTALLING OR SERVICING DEVICE.

ADJUSTMENTS: Switches are shipped from the factory set for a specified float travel. Reasonable adjustment of float travel can be made in the field by moving adjusting strips (7) which are held in place by Screws (A) and (B). Loosening Screw (B) and moving upper adjusting strip (7) will affect the upper limit of float travel only. Loosening Screw (A) and moving lower adjusting strip (7) will affect the lower limit of float travel.

REPLACEMENT PARTS LIST

Item Number	Description	Number Req'd.	Part Number
1	Set of Movable and Stationary Contacts ……..	2	9998 PC-242
2	Switch Mechanism CG Types (including Form R) ……..	1	1551-C7-G1
3	Float (304 SS) …….	1	9049 HF3
4	Float (316 SS) …….	1	9049 HF4
5	Adjusting Plate Assembly …….	1	2810-D7-G1
6	Operating Lever …….	1	65079-042-01
7	Adjusting Strip …….	2	2810-X8
8	Set Screw ……..	1	21801-14080
9	4½" ……Connector and Rod Assy ……	1	2810-C3-G19
9	5" ……Connector and Rod Assy ……	1	2810-C3-G18
9	7" ……Connector and Rod Assy ……	1	2810-C3-G6
-	Seal and Installation Kit (Buna-N) ……..	1	9998 PC-337
-	Seal and Installation Kit (Viton) ……..	1	9998 PC-338

9038-893
SERVICE
BULLETIN

***WHERE SEPARATE POWER SUPPLIES ARE PROVIDED, THE DISCONNECT MEANS FOR EACH MOTOR MUST BE GROUPED TOGETHER AND PROVIDED WITH SUITABLE WARNINGS IN ACCORDANCE WITH THE NATIONAL ELECTRICAL CODE AND ALL OTHER APPLICABLE CODES AND STANDARDS.**

CLASS 9038 MECHANICAL ALTERNATOR – WIRING DIAGRAMS*

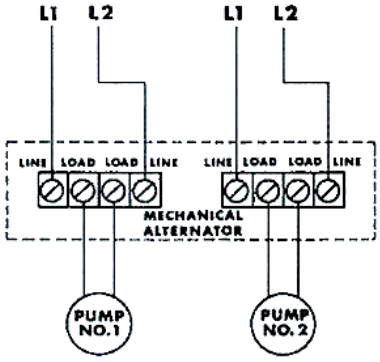

SINGLE PHASE MOTOR CONTROL

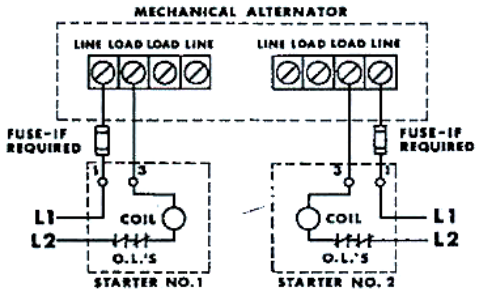

AC OPERATION OF MOTOR STARTERS

C65016-004-33

ELECTRICAL RATING OF ALARM SWITCH ONLY
CLASS 9007 TYPE AO1

AC PILOT DUTY		
VOLTS	BREAK	MAKE
110	15A	60A
220	10A	30A
440	6A	15A
600	5A	8A

D.C. PILOT DUTY SINGLE THROW			
VOLTS	115	220	600
AMPS	0.5 A	0.25A	0.05A
DOUBLE THROW			
VOLTS	115	220	600
AMPS	0.25A	0.1	—

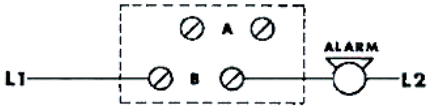

CIRCUIT A CLOSES ON FALLING LIQUID LEVEL
CIRCUIT B CLOSES ON RISING LIQUID LEVEL
(SWITCH CONTACTS MUST BE SAME POLARITY)

FORM N5 HIGH LEVEL ALARM

C65016-004-33

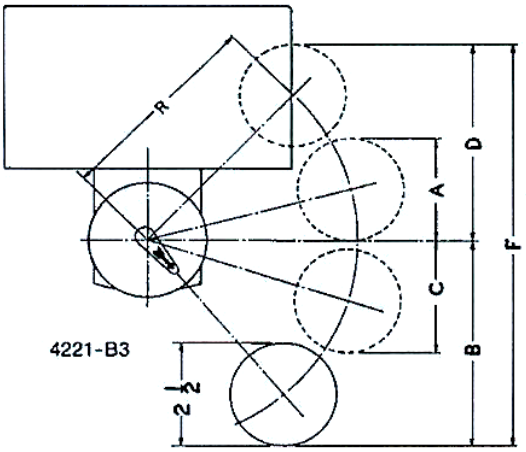

EXPLANATION OF FLOAT TRAVEL AND POSITION

NORMAL OPERATION: Switches will cut in and out at the high point and low point of distance A plus B, given in the tables. Under normal conditions, as long as one pump alone is able to handle the incoming water, the pumps will alternate at this distance. With the water level continuing to rise, the second switch will cut in and start the second pump when the float reaches the top of distance D. Both pumps will continue to run until the float returns to the low point of distance D plus C, where one pump will cut out. The other pump will continue until the float reaches the low point of distance B.

Type CG