MODEL TH750V-8 [redacted] -SW-WW

NOZZLES & CONNECTIONS		
MODEL	836/848	
ITEM	**SIZE, TYPE**	**SERVICE**
A	2" NPT	COLD WATER INLET
B	2" NPT	HOT WATER INLET
C	SEE TH750-SIZING CHART	CONTROL VALVE INLET
D	2.0" NPT	HEATING WATER OUTLET
E	1" NPT	P & T RELIEF
F	.75 NPT	HIGH TEMP SOLENOID VLV.
G	1" NPT	DRAIN
H	.75 NPT	TEMPERATURE GAUGE

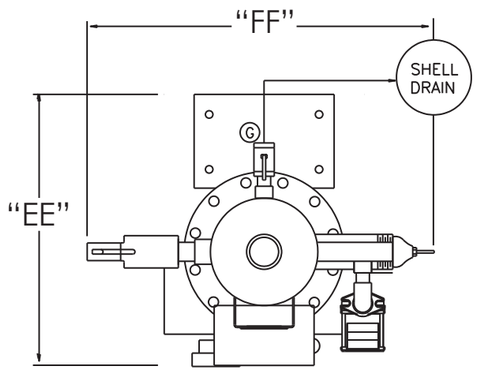

TOP VIEW

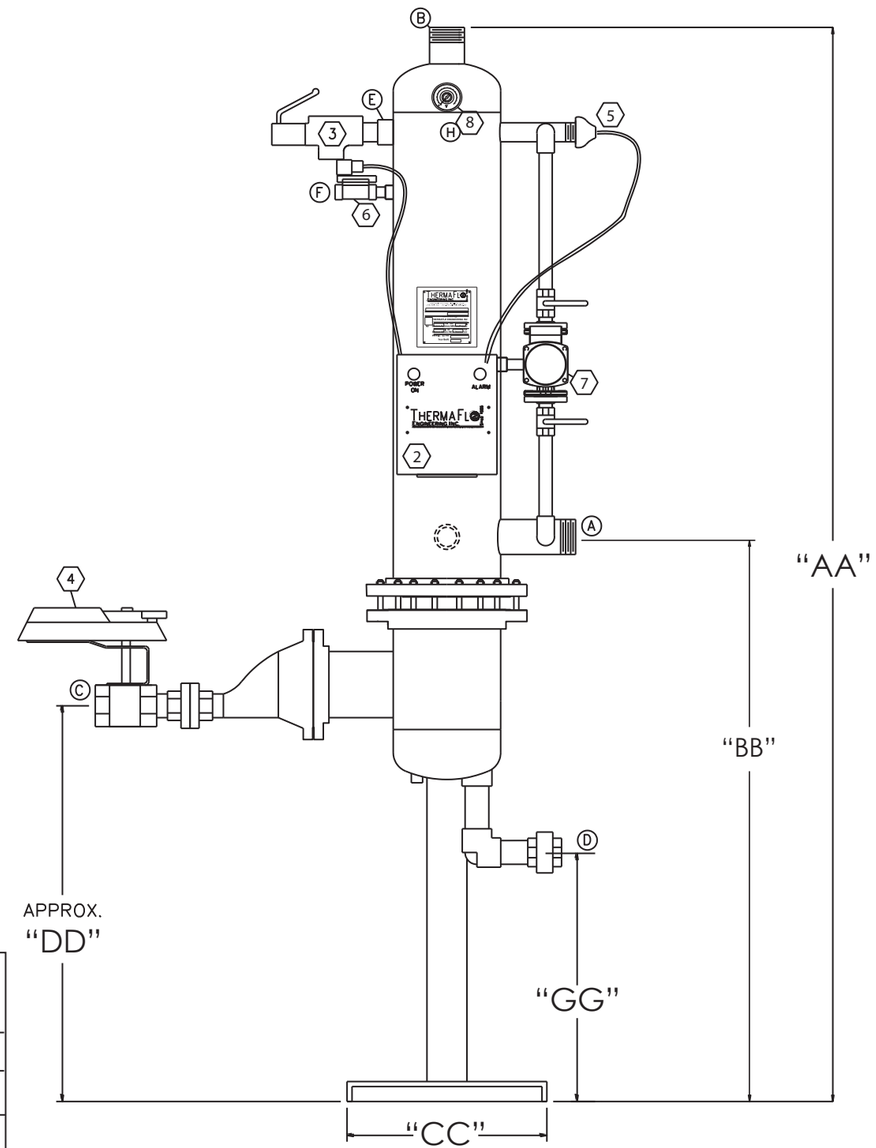

ELEVATION VIEW

STANDARD DIMENSIONS WATER / WATER									
MODEL #								WEIGHT (lbs)	
TH750V	"AA"	"BB"	"CC"	"DD"	"EE"	"FF"	"GG"	DRY	WET
836	95"	44"	20"	26"	24"	42"	19"	525	575
848	107"	56"	20"	38"	24"	42"	31"	545	595

CONDITIONS OF SERVICE:

DOMESTIC WATER FLOW: [redacted] GPM

INLET TEMP: [redacted] F°

OUTLET TEMP: [redacted] F°

BOILER WATER TO CONTROL VALVE [redacted] GPM @ [redacted] F

ITEM	CONNECTION	SIZE, TYPE, PN	SERVICE
3	E	[redacted]	P & T RELIEF
4	C	[redacted]	CONTROL VALVE INLET
5	D	[redacted]	BOILER WATER OUTLET
[redacted]	[redacted]	[redacted]	[redacted]
[redacted]	[redacted]	[redacted]	[redacted]

BILL OF MATERIAL

ITEM	DESCRIPTION
1	Thermaflo 316L SS ASME CODE STAMPED SHELL, SINGLE WALL, COPPER TUBE BUNDLE, FAB STEEL 2-PASS HEAD
2	THERMAFLO ENGINEERING INC. EC-800-EN-PM3 ELECTRONIC CONTROL PANEL. UL LISTED, NEMA 4 ENCLOSURE, WITH PID ELECTRONIC TEMPERATURE CONTROLLER, SAFETY SHUTDOWN SYSTEM, WHITE POWER ON AND RED OVER TEMPERATURE LIGHTS.
3	CASH ACME PRESSURE AND TEMPERATURE RELIEF VALVE, SET @ 150 PSIG @ 210°F
4	TYPE BV SERIES ELECTRONIC CONTROL VALVE, BRONZE BODY AND STAINLESS STEAL TRIM, ELECTRONIC MODULATING ACTUATOR, FAIL CLOSED SPRING RETURN.
5	1/2" RTD WITH 4-20MA INPUT TO THE CONTROLLER
6	3/4" HIGH TEMP DUMP SOLENOID VALVE NORMALLY OPEN/FAIL OPEN
7	TACO 009-IFC 316 SS CIRCULATION PUMP
8	3" DIAL BIMETAL THERMOMETER 0-250°F RANGE WITH STAINLESS STEEL WELL

DESIGN DATA

ASME CODE SECTION VIII, DIV 1 STAMP UM

SHELL RATED AT 150 PSIG @ 375°F
TUBES RATED AT 125 PSIG @ 300°F

MATERIALS OF CONSTRUCTION	
SHELL	316L STAINLESS STEEL
TUBESHEET	304 SS
TUBES	COPPER .035 WALL
HEAD	STEELE

TAG: [redacted]

- ASME CODE SECTION VIII DIV.1 UM STAMP CONSTRUCTION
- 100% FACTORY TESTED BEFORE SHIPMENT
- SINGLE SEATED CONTROL VALVE FOR DEAD TIGH SHUT OFF ON NO LOAD CONDITIONS
- VERTICAL CROSS FLOW SELF CLEANING TUBE DESIGN
- 316L STAINLESS STEELE SHELL CONSTRUCTION
- FULL SELF TUNING PID DIGITAL CONTROLS
- DOUBLE SAFETY SOLENOID SAFETY HIGH LIMIT SYSTEM FAIL SAFE TEMPERATURE CONTROLLER AND CONTROL VALVE
- SHELL BLOWDOWN VALVE AND EXPANDABLE TUBE DESIGN TO REMOVE INTERNAL SCALE BUILDUP
- 1.5" THICK INSULATION WITH HEAVY METAL JACKET
- ALL DIMENSIONS TO HAVE ±1/2" TOLERANCE
- MOUNTING FRAME HAMMERTONE POWDER COATED

NOTE:
1. MASTER BLEND VALVES SHOULD ALWAYS BE USED ON DOMESTIC WATER SYSTEMS TO PREVENT ANY CHANCE OF SCALDING.
2. PIPE ITEMS 3,6 AND SHELL DRAIN "G" TO SUITABLE FLOOR DRAIN.
3. NOZZLES WILL NOT SUPPORT EXTERNAL LOADINGS.
4. TANK & PIPING TO BE FULLY SUPPORTED IN FIELD.

THERMAFLO ENGINEERING INC. Since 1986
Manufacturers Of Steam Fired Specialty Equipment
12249 Nations Ford Road, Pineville NC 28134
(704) 940-1228 www.thermafloengineering.com

DESCRIPTION:
TH750V-[redacted]-SW-WW WATER TO WATER HEATER

CUSTOMER: [redacted]

J.O. # [redacted]	QTY. [redacted]	DATE: [redacted]
SCALE: 1=1 PRINTED: NTS	DR. NAL	P.O. # [redacted]
SALES: [redacted]	DRAWING # TH750V-8[redacted]-SW-WW	REV. [redacted]